IZOLATORSKI LANCI do 35 kV
INSULATOR STRINGS up to 35 kV

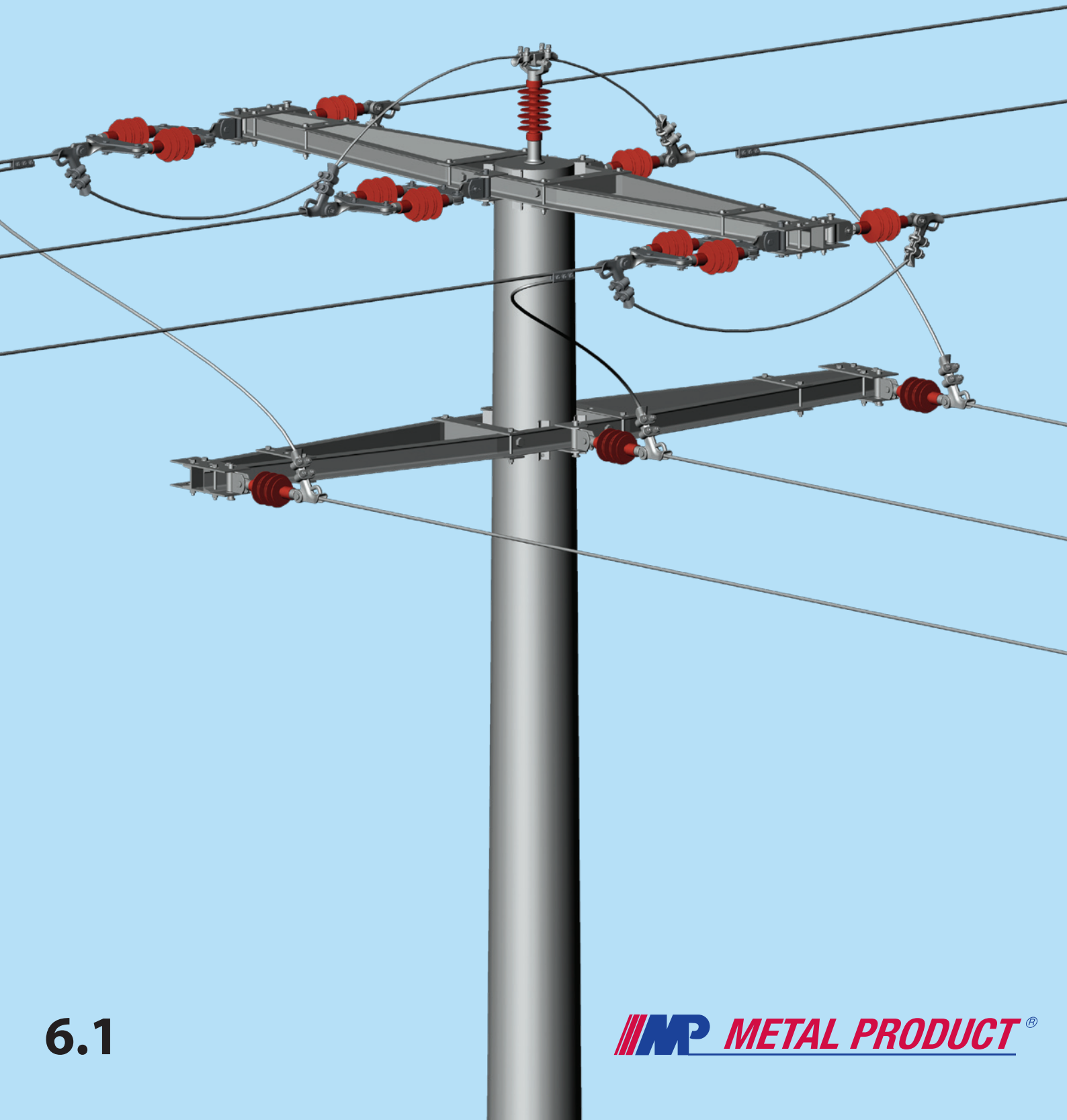

6.1

METAL PRODUCT®

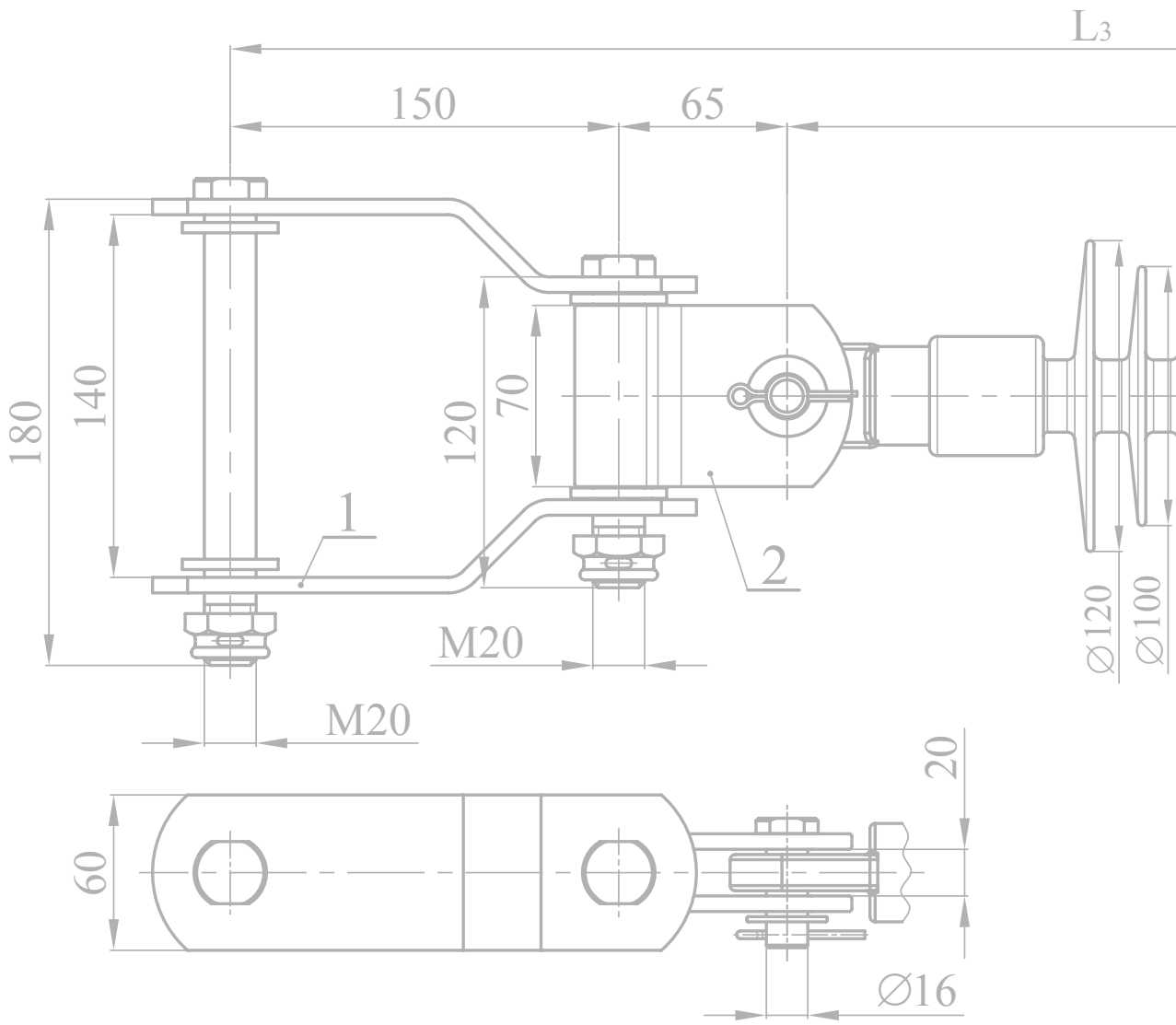

Objavom izdanja ovog kataloga **6.1** sva prethodna izdanja postaju nevažeća.

METAL PRODUCT zadržava pravo izmjene podataka prema zahtjevima tehnološkog napretka i bez prethodne najave.

Informacije o proizvodima koji nisu uvršteni u ovaj katalog mogu se dobiti na poseban upit.

Prilikom narudžbe potrebno je definirati:

- ☐ Kataloški broj proizvoda
- ☐ Tip proizvoda
- ☐ Potrebnu količinu

*Upon publication of this catalogue **6.1**, all previus issues become invalid.*

*The right to change data at any time without notice, is reserved as part of **METAL PRODUCT** policy of continuous development and improvement.*

All additional product information not enlisted in this issue can be submitted upon request.

When ordering, please specify:

- ☐*Catalogue number*
- ☐*Product type*
- ☐*Quantity*

Tvornica za proizvodnju elektroopreme METAL PRODUCT d.o.o. osnovana je 1967. godine i već 40 godina proizvodi ovjesnu i spojnu opremu za električne mreže niskog i srednjeg napona, kabelski spojni pribor i metalne konstrukcije prema zahtjevima kupaca.

Dugogodišnje iskustvo u razvoju i proizvodnji navedene opreme jamstvo su kvalitete, funkcionalnosti i pouzdanosti te opreme u pogonu.

Nivo kvalitete se osigurava u skladu s odredbama norme ISO 9001:2000, što podrazumijeva puni angažman svih sudionika u procesu rada.

Održivi razvoj i zaštitu okoliša METAL PRODUCT osigurava primjenom međunarodnog standarda ISO 14001 te tako daje svoj puni doprinos zaštiti okoliša u interesu svih nas i budućih generacija.

Vlastiti razvoj proizvoda i tehnološka samostalnost, te suradnja s visokoobrazovnim ustanovama i institutima, profilirali su METAL PRODUCT kao tvrtku od povjerenja za proizvodnju sljedeće opreme:

- Kabelski spojni pribor za niski, srednji i visoki napon (kabelske stopice i čahure u Cu, Al i Al/Cu izvedbi za presjeke od 6 do 630 mm^2)
- Kabelski pribor za energetske mreže napona 1 kV u suradnji s firmom TYCO-RAYCHEM
- Spojna i ovjesna oprema za NN nadzemne mreže s izoliranim vodičima u snopu
- Spojna i ovjesna oprema za NN neizolirane nadzemne mreže
- Spojna i ovjesna oprema za SN neizolirane i poluizolirane (PAS) nadzemne mreže
- Izolatorski lanci 24 kV
- Rastavljači i rastavne sklopke 24 kV za vanjsku montažu u suradnji s ABB-om

Established in 1967, METAL PRODUCT Ltd., has been manufacturing electrical equipment, suspension and jointing equipment for low and middle voltage electric power supply systems, as well as cable connection equipment and custom-made metal constructions for 40 years.

With its long experience in development and production of the equipment METAL PRODUCT guarantees the best quality, functionality and reliability of purchased equipment.

The quality provided is in accordance with the ISO 9001:2000 international standard, which implies the full engagement of all participants in the production process.

By applying the ISO 14001 international standard, METAL PRODUCT provides sustainable development and environmental protection, hence contributing the global environmental protection.

Own product development and technological independence as well as the cooperation with organizations of higher education and institutions have made METAL PRODUCT a trustworthy company producing the following equipment:

- *Cable connection equipment for low-, middle- and high-voltage (cable lug and connectors in Cu, Al and Al/Cu variante for diameter range 6 - 630 mm2)*
- *Cable equipment for 1 kV voltage power supply network in cooperation with TYCO-RAYCHEM company*
- *Cable suspension and jointing equipment i.e. connectors and fittings for low-voltage insulated overhead lines*
- *Cable suspension and jointing equipment i.e. connectors and fittings for low-voltage bare overhead lines*
- *Cable suspension and jointing equipment for bare and half-insulated MV overhead electroenergetic networks*
- *Insulator strings 24 kV*
- *Switch and switch chamber 24 kV for outer assembling in cooperation with ABB company*

SADRŽAJ
CONTENT

	Stranica *Page*
■ Jednostruki nosivi izolatorski lanci ■ *Single suspension insulator strings*	3 – 6
■ Jednostruki zatezni izolatorski lanci ■ *Single tension insulator strings*	7 – 14
■ Dvostruki nosivi izolatorski lanci ■ *Double suspension insulator strings*	15 – 18
■ Dvostruki zatezni izolatorski lanci ■ *Double tension insulator strings*	19 – 24
■ Kompozitni nosivi i zatezni izolatori ■ *Composite suspension and tension insulators*	25 – 29
■ Oprema izolatorskih lanaca ■ *String insulator accessories*	30 – 48

JEDNOSTRUKI NOSIVI LANAC 20 i 35 kV
SINGLE SUSPENSION STRING 20 and 35 kV

METAL PRODUCT®

Tip lanca *String description*	**JNL-1/27-NS-1**	Pregled jednostrukih nosivih lanaca vidi na str. 6 *Single suspension string overview see on page 6*

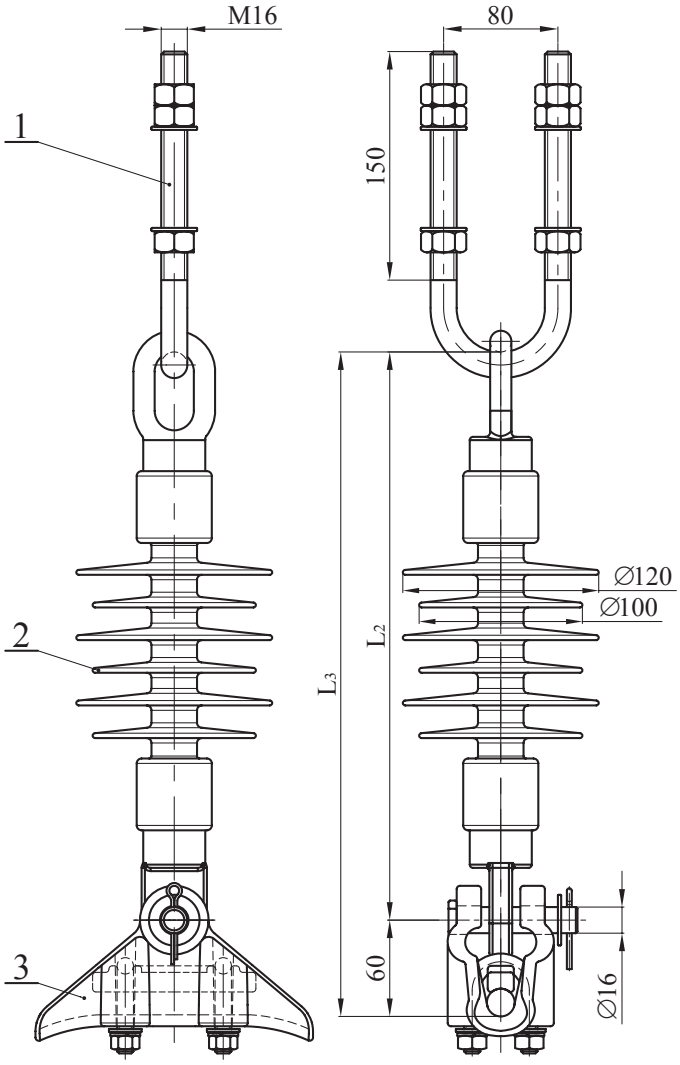

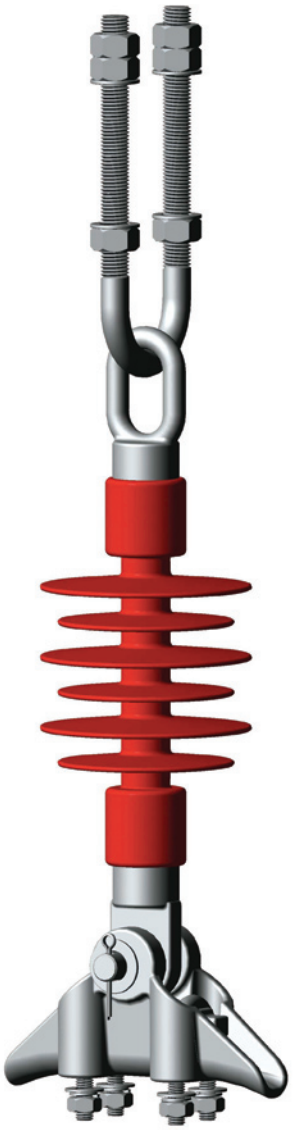

Poz. *Pos.*	Naziv pozicije *Description*	Tip *Type*	Količina *Quantity*	Materijal *Material*	Kataloški broj *Catalogue number*
1	U-stremen *U-bolt*	UST-16-3	1	Čelik v. Zn. *Steel h. d. g.*	MP395014
2	Štapni kompozitni izolator *Composite tension insulator*	TYCO ELECTRONICS	1	Čelik + Crveni EVA *Steel + Red EVA*	RST-DS27R-ETP-70kN (vidi str. → 25 – 29 ← *see page*)
3	Nosiva stezaljka *Suspension clamp*	NS-1	1	Al. legura *Al. alloy*	MP395230

JEDNOSTRUKI NOSIVI LANAC 20 i 35 kV
SINGLE SUSPENSION STRING 20 and 35 kV

METAL PRODUCT®

Tip lanca *String description*	**JNL-2/27-NS-1**	Pregled jednostrukih nosivih lanaca vidi na str. 6 *Single suspension string overview see on page 6*

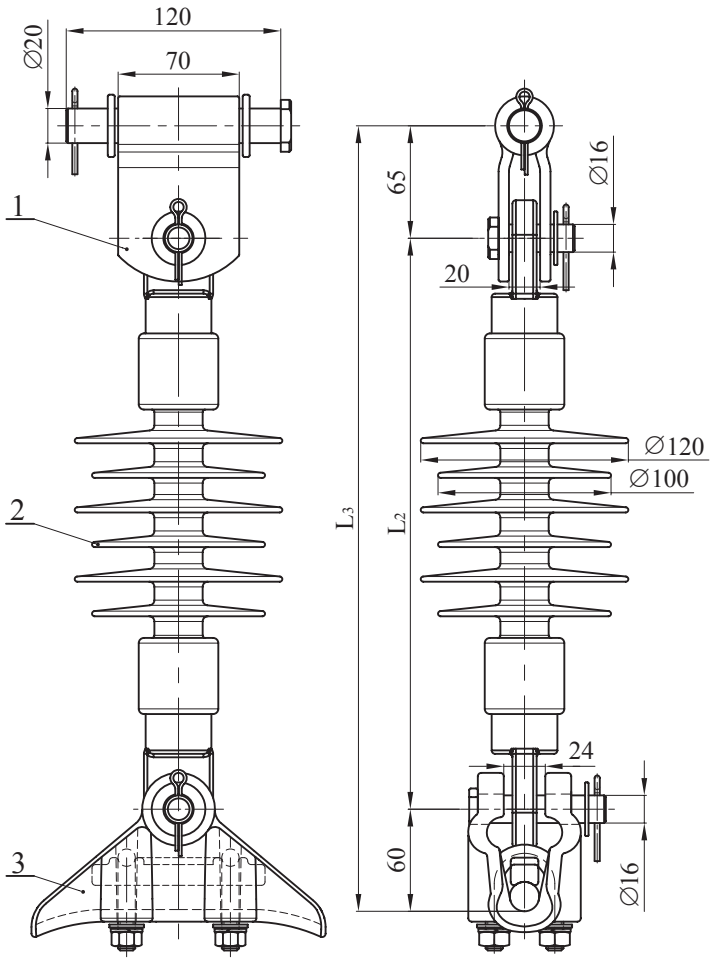

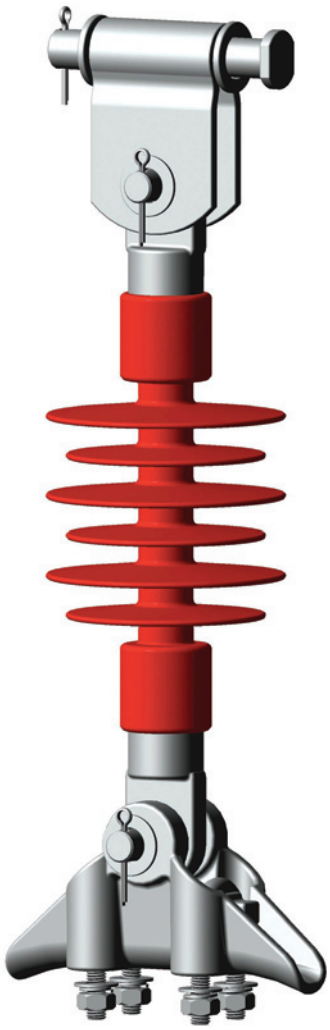

Poz. *Pos.*	Naziv pozicije *Description*	Tip *Type*	Količina *Quantity*	Materijal *Material*	Kataloški broj *Catalogue number*
1	Zastavica *Hinge*	ZL-70/16	1	Čelik v. Zn. *Steel h. d. g.*	MP395532
2	Štapni kompozitni izolator *Composite tension insulator*	TYCO ELECTRONICS	1	Čelik + Crveni EVA *Steel + Red EVA*	RST-DS27R-TTP-70kN (vidi str. → 25 – 29 ← *see page*)
3	Nosiva stezaljka *Suspension clamp*	NS-1	1	Al. legura *Al. alloy*	MP395230

JEDNOSTRUKI NOSIVI LANAC 20 i 35 kV
SINGLE SUSPENSION STRING 20 and 35 kV

METAL PRODUCT®

Tip lanca *String description*	**JNL-3/27-NS-1**	Pregled jednostrukih nosivih lanaca vidi na str. 6 *Single suspension string overview see on page 6*

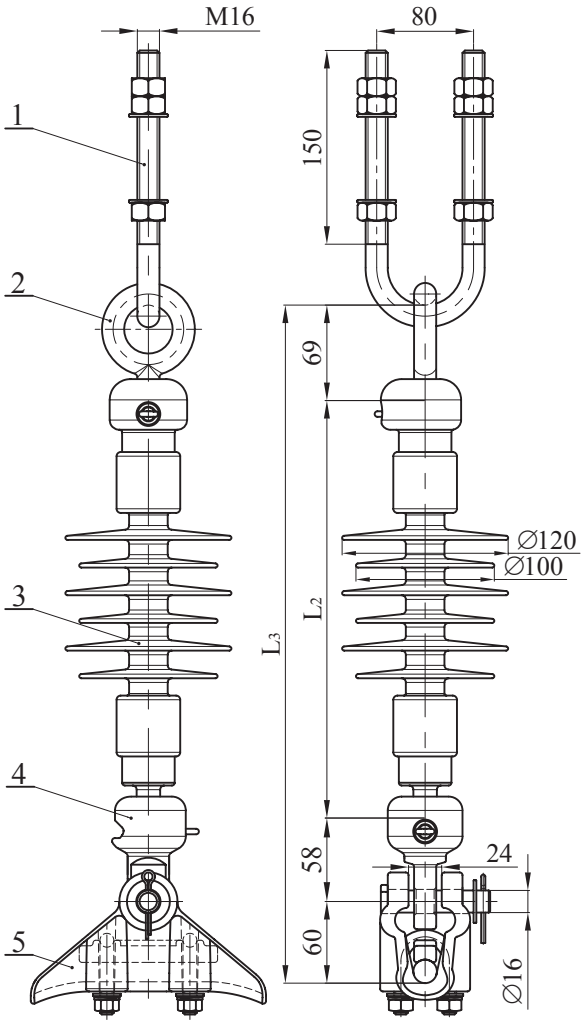

Poz. *Pos.*	Naziv pozicije *Description*	Tip *Type*	Količina *Quantity*	Materijal *Material*	Kataloški broj *Catalogue number*
1	U-stremen *U-bolt*	UST-16-3	1	Čelik v. Zn. *Steel h. d. g.*	MP395014
2	Očka s batićem *Ball eye*	OB-80	1	Čelik v. Zn. *Steel h. d. g.*	MP395100
3	Štapni kompozitni izolator *Composite tension insulator*	TYCO ELECTRONICS	1	Čelik + Crveni EVA *Steel + Red EVA*	RST-DS27R-SBP-70kN (vidi str. → 25 – 29 ← *see page*)
4	Zdjelica s očkom *Socket tongue*	ZO-16B/1	1	Čelik v. Zn. *Steel h. d. g*	MP395602
5	Nosiva stezaljka *Suspension clamp*	NS-1	1	Al. legura *Al. alloy*	MP395230

JEDNOSTRUKI ZATEZNI LANCI 20 i 35 kV
SINGLE TENSION STRINGS 20 and 35 kV

METAL PRODUCT®

Pregled jednostrukih zateznih lanaca / Single tension strings overview

Tip lanca *String description*	Kataloški broj *Catalogue Number*	Tip izolatora *Insulator description*	Nazivna naponska klasa [kV] *Nominal voltage rating[kV]*	Duljina klizne staze [mm] *Creepage distance [mm]*	Duljina izolatora L_2 [mm] *Insulator lenght L_2 [mm]*	Duljina lanca L_3 [mm] *String loenght L_3 [mm]*	Masa [kg] *Mass [kg]*
		KARIKA – OČKA					
JNL-1/19-NS-1	MP301101	RST-DS19R-ETP-70 kN	19	497	288	348	3,40
JNL-1/24-NS-1	MP301102	RST-DS24R-ETP-70 kN	24	602	308	368	3,50
JNL-1/27-NS-1	MP301103	RST-DS27R-ETP-70 kN	27	687	328	388	3,60
JNL-1/31-NS-1	MP301104	RST-DS31R-ETP-70 kN	31	791	348	408	3,70
JNL-1/39-NS-1	MP301105	RST-DS39R-ETP-70 kN	39	980	388	448	3,80
JNL-1/50-NS-1	MP301106	RST-DS50R-ETP-70 kN	50	1254	448	508	4,00
		OČKA - OČKA					
JNL-2/19-NS-1	MP301111	RST-DS19R-TTP-70 kN	19	497	288	413	4,38
JNL-2/24-NS-1	MP301112	RST-DS24R-TTP-70 kN	24	602	308	433	4,48
JNL-2/27-NS-1	MP301113	RST-DS27R-TTP-70 kN	27	687	328	453	4,58
JNL-2/31-NS-1	MP301114	RST-DS31R-TTP-70 kN	31	791	348	473	4,68
JNL-2/39-NS-1	MP301115	RST-DS39R-TTP-70 kN	39	980	388	513	4,78
JNL-2/50-NS-1	MP301116	RST-DS50R-TTP-70 kN	50	1254	448	573	4,98
		ZDJELICA - BATIĆ					
JNL-3/19-NS-1	MP301121	RST-DS19R-SBP-70 kN	19	497	288	475	4,35
JNL-3/24-NS-1	MP301122	RST-DS24R-SBP-70 kN	24	602	308	495	4,45
JNL-3/27-NS-1	MP301123	RST-DS27R-SBP-70 kN	27	687	328	515	4,55
JNL-3/31-NS-1	MP301124	RST-DS31R-SBP-70 kN	31	791	348	535	4,65
JNL-3/39-NS-1	MP301125	RST-DS39R-SBP-70 kN	39	980	388	575	4,75
JNL-3/50-NS-1	MP301126	RST-DS50R-SBP-70 kN	50	1254	448	635	4,95

Nosiva stezaljka NS-1 obuhvaća Al/Če vodiče od 50/8 do 120/20 (Ø 9,0 – 17,0)
Suspension clamp NS-1 for ACSR conductor 50/8 - 120/20 (Ø 9,0 – 17,0)

JEDNOSTRUKI ZATEZNI LANAC 20 i 35 kV
SINGLE TENSION STRING 20 and 35 kV

METAL PRODUCT®

Tip lanca *String description*	**JZL-1/27-ZS-2** **JZL-1/27-ZS-3**	Pregled jednostrukih zateznih lanaca vidi na str. 13 i 14 *Single tension string overview see on page 13 and 14*

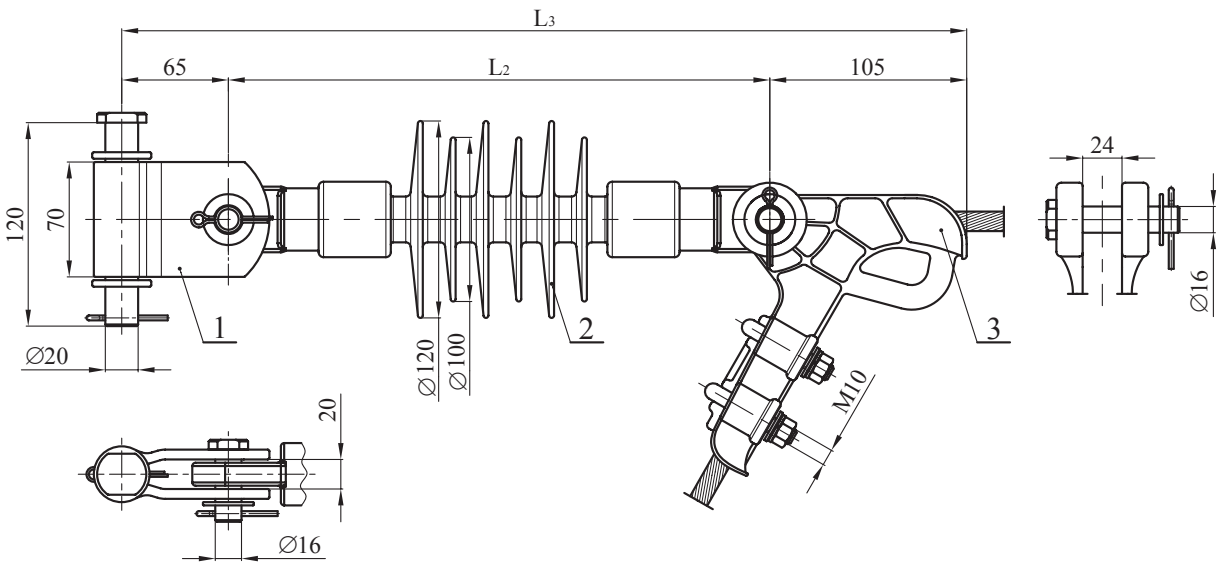

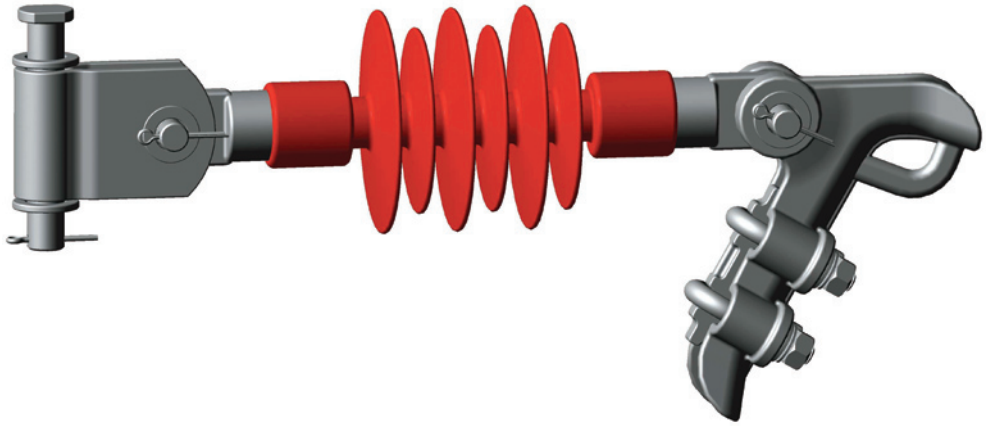

Poz. *Pos.*	Naziv pozicije *Description*	Tip *Type*	Količina *Quantity*	Materijal *Material*	Kataloški broj *Catalogue number*
1	Zastavica *Hinge*	ZL-70/16	1	Čelik v. Zn. *Steel h. d. g.*	MP395532
2	Štapni kompozitni izolator *Composite tension insulator*	TYCO ELECTRONICS	1	Čelik + Crveni EVA *Steel + Red EVA*	RST-DS27R-TTP-70kN (vidi str. → 25 – 29 ← *see page*)
3	Zatezna stezaljka *Tension clamp*	ZS-2	1	Al. legura *Al. alloy*	MP395210
		ZS-3	1	Al. legura *Al. alloy*	MP395220

JEDNOSTRUKI ZATEZNI LANAC 20 i 35 kV
SINGLE TENSION STRING 20 and 35 kV

METAL PRODUCT®

Tip lanca *String description*	**JZL-2/27-ZS-2** **JZL-2/27-ZS-3**	Pregled jednostrukih zateznih lanaca vidi na str. 13 i 14 *Single tension string overview see on page 13 and 14*

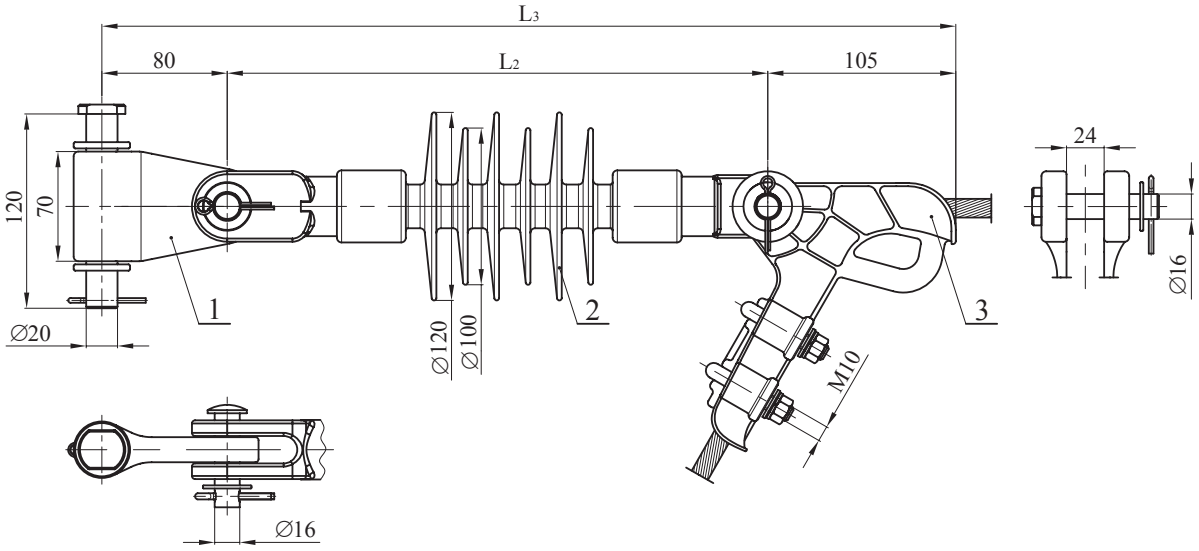

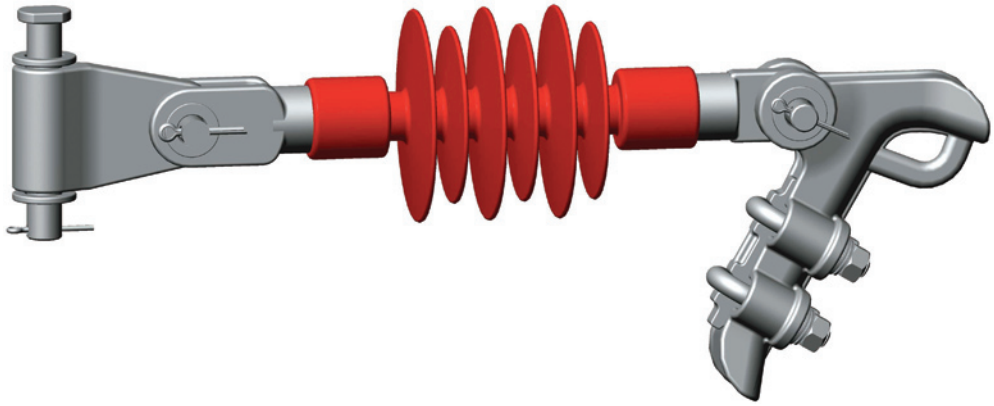

Poz. *Pos.*	Naziv pozicije *Description*	Tip *Type*	Količina *Quantity*	Materijal *Material*	Kataloški broj *Catalogue number*
1	Zastavica *Hinge*	ZK-70/16	1	Čelik v. Zn. *Steel h. d. g.*	MP395525
2	Štapni kompozitni izolator *Composite tension insulator*	TYCO ELECTRONICS	1	Čelik + Crveni EVA *Steel + Red EVA*	RST-DS27R-CTP-70kN (vidi str. → 25 – 29 ← *see page*)
3	Zatezna stezaljka *Tension clamp*	ZS-2	1	Al. legura *Al. alloy*	MP395210
		ZS-3	1	Al. legura *Al. alloy*	MP395220

JEDNOSTRUKI ZATEZNI LANAC 20 i 35 kV
SINGLE TENSION STRING 20 and 35 kV

METAL PRODUCT®

Tip lanca *String description*	**JZL-3/27-ZS-2** **JZL-3/27-ZS-3**	Pregled jednostrukih zateznih lanaca vidi na str. 13 i 14 *Single tension string overview see on page 13 and 14*

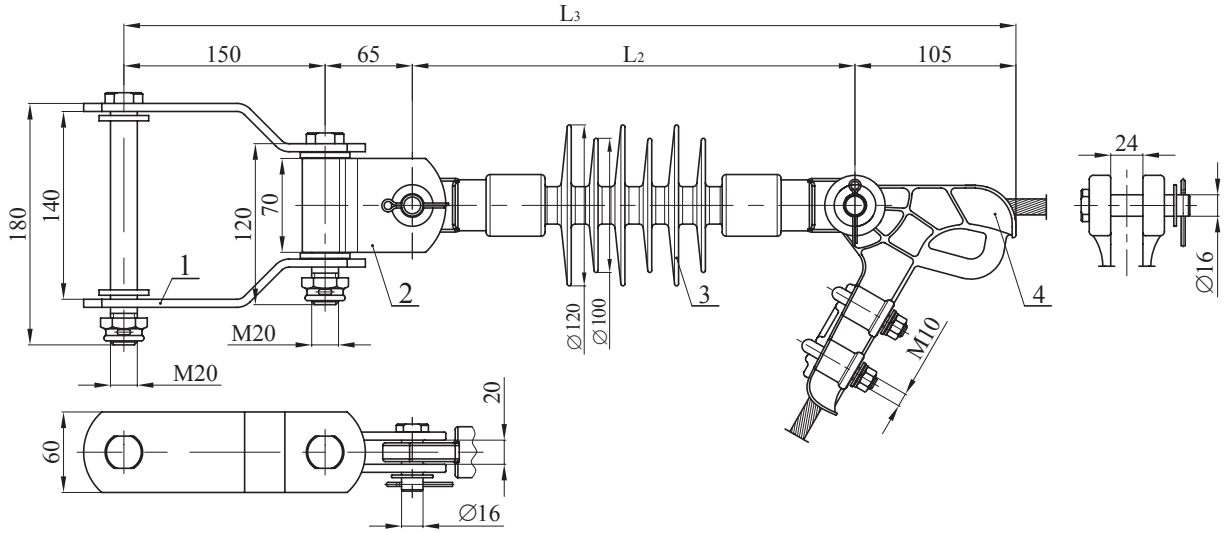

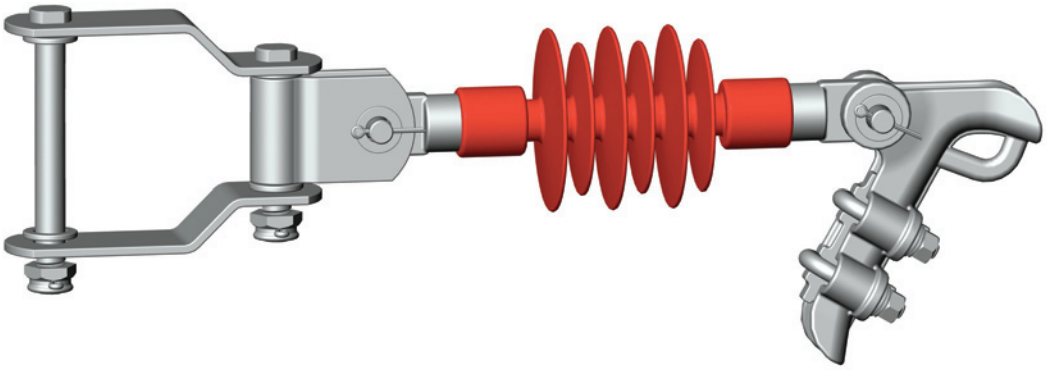

Poz. *Pos.*	Naziv pozicije *Description*	Tip *Type*	Količina *Quantity*	Materijal *Material*	Kataloški broj *Catalogue number*
1	Stremen jednostruki savinuti *Single shackle*	SZ-3	1	Čelik v. Zn. *Steel h. d. g.*	MP395127
2	Zastavica *Hinge*	ZK-70/16	1	Čelik v. Zn. *Steel h. d. g.*	MP395532
3	Štapni kompozitni izolator *Composite tension insulator*	TYCO ELECTRONICS	1	Čelik + Crveni EVA *Steel + Red EVA*	RST-DS27R-TTP-70kN (vidi str. → 25 – 29 ← *see page*)
4	Zatezna stezaljka *Tension clamp*	ZS-2	1	Al. legura *Al. alloy*	MP395210
		ZS-3	1	Al. legura *Al. alloy*	MP395220

JEDNOSTRUKI ZATEZNI LANAC 20 i 35 kV
SINGLE TENSION STRING 20 and 35 kV

METAL PRODUCT®

Tip lanca *String description*	**JZL-4/27-ZS-2** **JZL-4/27-ZS-3**	Pregled jednostrukih zateznih lanaca vidi na str. 13 i 14 *Single tension string overview see on page 13 and 14*

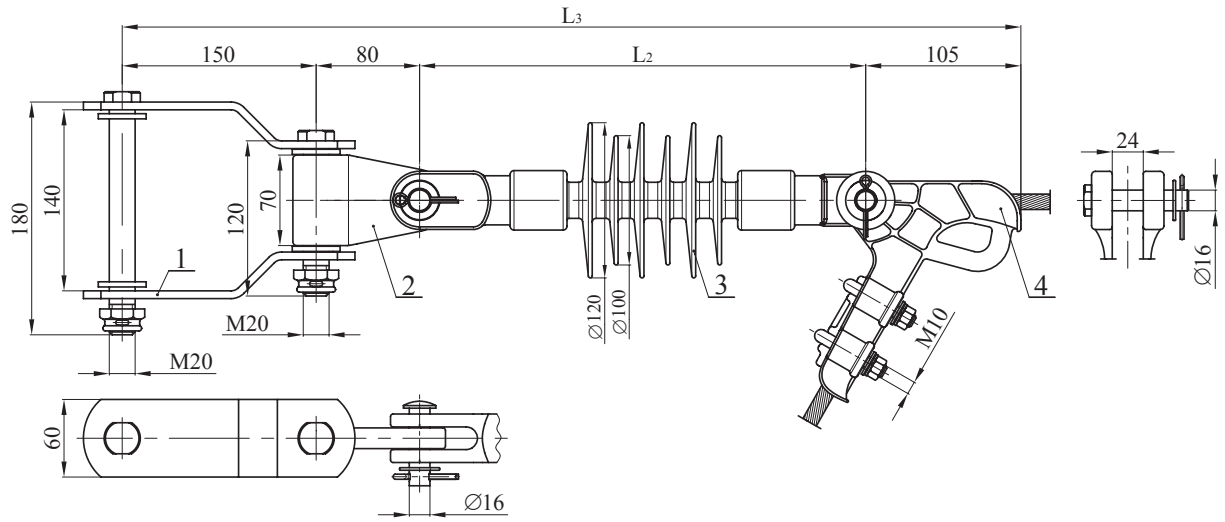

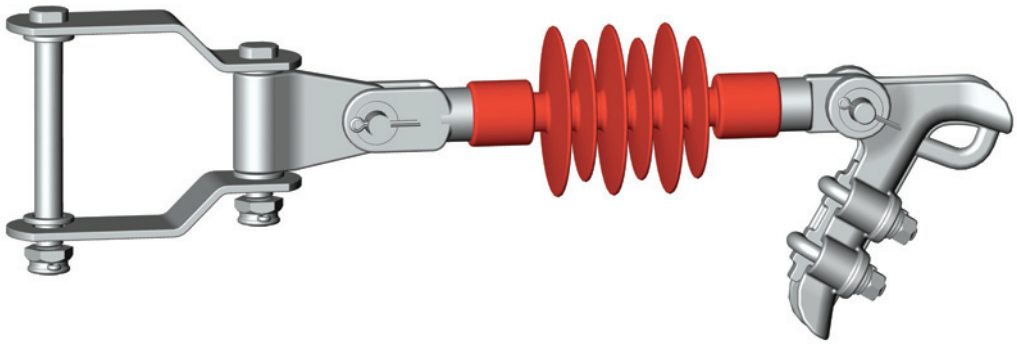

Poz. *Pos.*	Naziv pozicije *Description*	Tip *Type*	Količina *Quantity*	Materijal *Material*	Kataloški broj *Catalogue number*
1	Stremen jednostruki savinuti *Single shackle*	SZ-3	1	Čelik v. Zn. *Steel h. d. g.*	MP395127
2	Zastavica *Hinge*	ZK-70/16	1	Čelik v. Zn. *Steel h. d. g.*	MP395525
3	Štapni kompozitni izolator *Composite tension insulator*	TYCO ELECTRONICS	1	Čelik + Crveni EVA *Steel + Red EVA*	RST-DS27R-CTP-70kN (vidi str. → 25 – 29 ← *see page*)
4	Zatezna stezaljka *Tension clamp*	ZS-2	1	Al. legura *Al. alloy*	MP395210
		ZS-3	1	Al. legura *Al. alloy*	MP395220

JEDNOSTRUKI ZATEZNI LANAC 20 i 35 kV
SINGLE TENSION STRING 20 and 35 kV

METAL PRODUCT®

Tip lanca *String description*	**JZL-5/27-ZS-2** **JZL-5/27-ZS-3**	Pregled jednostrukih zateznih lanaca vidi na str. 13 i 14 *Single tension string overview see on page 13 and 14*

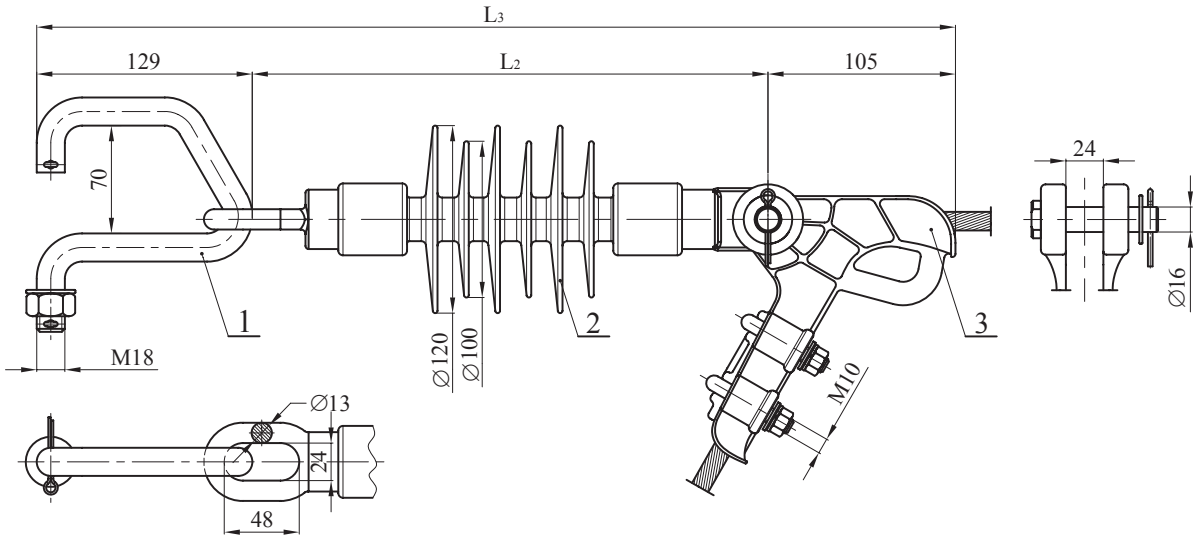

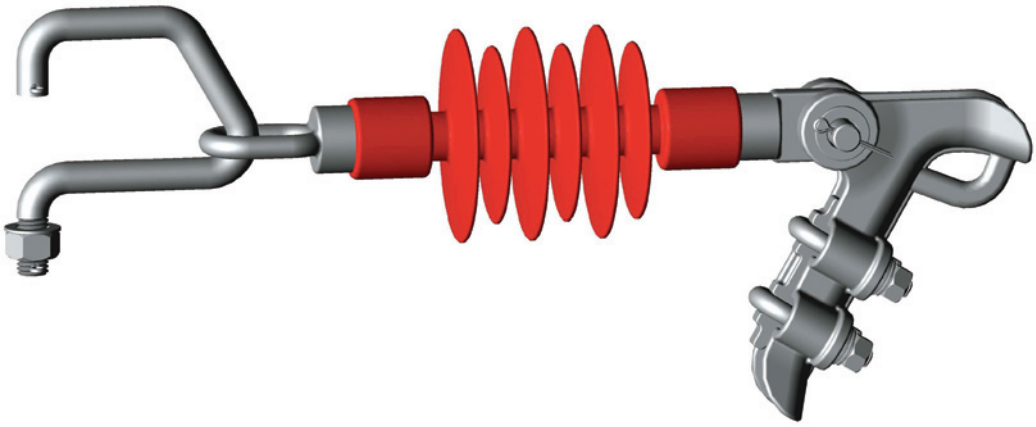

Poz. *Pos.*	Naziv pozicije *Description*	Tip *Type*	Količina *Quantity*	Materijal *Material*	Kataloški broj *Catalogue number*
1	*D stremen* *D support*	G-120	1	Čelik v. Zn. *Steel h. d. g.*	MP395010
2	Štapni kompozitni izolator *Composite tension insulator*	TYCO ELECTRONICS	1	Čelik + Crveni EVA *Steel + Red EVA*	RST-DS27R-ETR-70kN (vidi str. → 25 – 29 ← *see page*)
3	Zatezna stezaljka *Tension clamp*	ZS-2	1	Al. legura *Al. alloy*	MP395210
		ZS-3	1	Al. legura *Al. alloy*	MP395220

JEDNOSTRUKI ZATEZNI LANAC 20 i 35 kV
SINGLE TENSION STRING 20 and 35 kV

METAL PRODUCT®

Tip lanca *String description*	**JZL-6/27-ZS-2** **JZL-6/27-ZS-3**	Pregled jednostrukih zateznih lanaca vidi na str. 13 i 14 *Single tension string overview see on page 13 and 14*

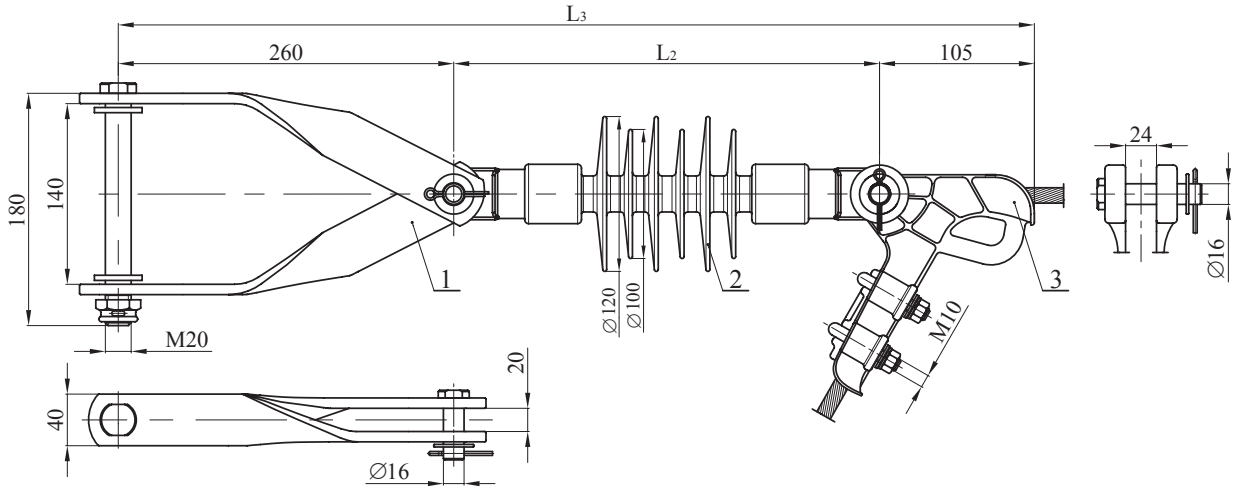

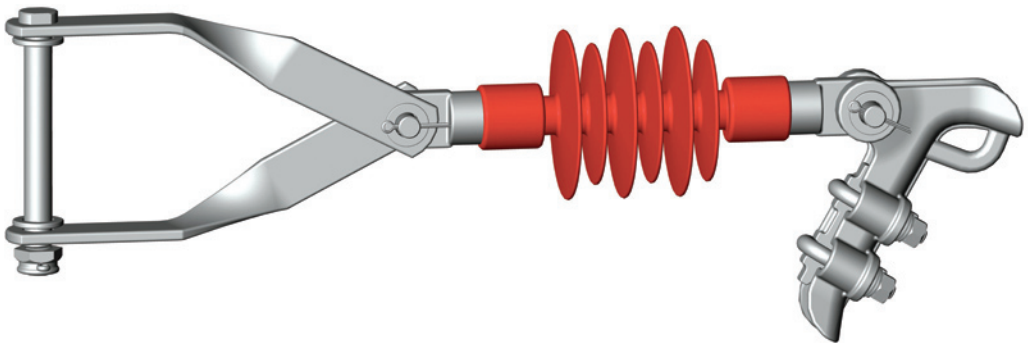

Poz. *Pos.*	Naziv pozicije *Description*	Tip *Type*	Količina *Quantity*	Materijal *Material*	Kataloški broj *Catalogue number*
1	*Stremen jednostruki zakrenuti* *Single shackle*	SZ-1	1	Čelik v. Zn. *Steel h. d. g.*	MP395125
2	Štapni kompozitni izolator *Composite tension insulator*	TYCO ELECTRONICS	1	Čelik + Crveni EVA *Steel + Red EVA*	RST-DS27R-TTP-70kN (vidi str. → 25 – 29 ← *see page*)
3	Zatezna stezaljka *Tension clamp*	ZS-2	1	Al. legura *Al. alloy*	MP395210
		ZS-3	1	Al. legura *Al. alloy*	MP395220

JEDNOSTRUKI ZATEZNI LANCI 20 i 35 kV
SINGLE TENSION STRINGS 20 and 35 kV

METAL PRODUCT®

Pregled jednostrukih zateznih lanaca / Single tension strings overview

Tip lanca *String description*	Kataloški broj *Catalogue Number*	Tip izolatora *Insulator description*	Nazivna naponska klasa [kV] *Nominal voltage rating[kV]*	Duljina klizne staze [mm] *Creepage distance [mm]*	Duljina izolatora L_2 [mm] *Insulator lenght L_2 [mm]*	Duljina lanca L_3 [mm] *String loenght L_3 [mm]*	Masa [kg] *Mass [kg]*
		OČKA – OČKA					
JZL-1/19-ZS-2	MP301131	RST-DS19R-TTP-70 kN	19	497	288	458	4,08
JZL-1/24-ZS-2	MP301132	RST-DS24R-TTP-70 kN	24	602	308	478	4,18
JZL-1/27-ZS-2	MP301133	RST-DS27R-TTP-70 kN	27	687	328	498	4,28
JZL-1/31-ZS-2	MP301134	RST-DS31R-TTP-70 kN	31	791	348	518	4,38
JZL-1/39-ZS-2	MP301135	RST-DS39R-TTP-70 kN	39	980	388	558	4,48
JZL-1/50-ZS-2	MP301136	RST-DS50R-TTP-70 kN	50	1254	448	618	4,68
		VILICA - OČKA					
JZL-2/19-ZS-2	MP301151	RST-DS19R-CTP-70 kN	19	497	288	473	3,55
JZL-2/24-ZS-2	MP301152	RST-DS24R-CTP-70 kN	24	602	308	493	3,65
JZL-2/27-ZS-2	MP301153	RST-DS27R-CTP-70 kN	27	687	328	513	3,75
JZL-2/31-ZS-2	MP301154	RST-DS31R-CTP-70 kN	31	791	348	533	3,85
JZL-2/39-ZS-2	MP301155	RST-DS39R-CTP-70 kN	39	980	388	573	3,95
JZL-2/50-ZS-2	MP301156	RST-DS50R-CTP-70 kN	50	1254	448	633	4,15
		OČKA – OČKA					
JZL-3/19-ZS-2	MP301171	RST-DS19R-TTP-70 kN	19	497	288	608	7,11
JZL-3/24-ZS-2	MP301172	RST-DS24R-TTP-70 kN	24	602	308	628	7,21
JZL-3/27-ZS-2	MP301173	RST-DS27R-TTP-70 kN	27	687	328	648	7,31
JZL-3/31-ZS-2	MP301174	RST-DS31R-TTP-70 kN	31	791	348	668	7,41
JZL-3/39-ZS-2	MP301175	RST-DS39R-TTP-70 kN	39	980	388	708	7,51
JZL-3/50-ZS-2	MP301176	RST-DS50R-TTP-70 kN	50	1254	448	768	7,71
		VILICA - OČKA					
JZL-4/19-ZS-2	MP301185	RST-DS19R-CTP-70 kN	19	497	288	623	6,58
JZL-4/24-ZS-2	MP301186	RST-DS24R- CTP -70 kN	24	602	308	643	6,68
JZL-4/27-ZS-2	MP301187	RST-DS27R- CTP -70 kN	27	687	328	663	6,78
JZL-4/31-ZS-2	MP301188	RST-DS31R- CTP -70 kN	31	791	348	683	6,88
JZL-4/39-ZS-2	MP301189	RST-DS39R- CTP -70 kN	39	980	388	723	6,98
JZL-4/50-ZS-2	MP301190	RST-DS50R- CTP -70 kN	50	1254	448	783	7,18
		KARIKA – OČKA 90°					
JZL-5/19-ZS-2	MP301211	RST-DS19R-ETR-70 kN	19	497	288	522	2,96
JZL-5/24-ZS-2	MP301212	RST-DS24R- ETR-70 kN	24	602	308	542	3,06
JZL-5/27-ZS-2	MP301213	RST-DS27R- ETR-70 kN	27	687	328	562	3,16
JZL-5/31-ZS-2	MP301214	RST-DS31R-ETR-70 kN	31	791	348	582	3,26
JZL-5/39-ZS-2	MP301215	RST-DS39R-ETR-70 kN	39	980	388	622	3,36
JZL-5/50-ZS-2	MP301216	RST-DS50R-ETR-70 kN	50	1254	448	682	3,56
		OČKA – OČKA					
JZL-6/19-ZS-2	MP301231	RST-DS19R-TTP-70 kN	19	497	288	653	4,42
JZL-6/24-ZS-2	MP301232	RST-DS24R-TTP-70 kN	24	602	308	673	4,52
JZL-6/27-ZS-2	MP301233	RST-DS27R-TTP-70 kN	27	687	328	693	4,62
JZL-6/31-ZS-2	MP301234	RST-DS31R-TTP-70 kN	31	791	348	713	4,72
JZL-6/39-ZS-2	MP301235	RST-DS39R-TTP-70 kN	39	980	388	753	4,82
JZL-6/50-ZS-2	MP301236	RST-DS50R-TTP-70 kN	50	1254	448	813	5,02

Zatezna stezaljka ZS-2 obuhvaća Al/Če vodiče od 25/4 do 70/12 (Ø 6,0 – 12,0)
Tension clamp ZS-2 for ACSR conductor 25/4 – 70/12 (Ø 6,0 – 12,0)

JEDNOSTRUKI ZATEZNI LANCI 20 i 35 kV
SINGLE TENSION STRINGS 20 and 35 kV

METAL PRODUCT®

Pregled jednostrukih zateznih lanaca / Single tension strings overview

Tip lanca *String description*	Kataloški broj *Catalogue Number*	Tip izolatora *Insulator description*	Nazivna naponska klasa [kV] *Nominal voltage rating[kV]*	Duljina klizne staze [mm] *Creepage distance [mm]*	Duljina izolatora L_2 [mm] *Insulator lenght L_2 [mm]*	Duljina lanca L_3 [mm] *String loenght L_3 [mm]*	Masa [kg] *Mass [kg]*
		OČKA – OČKA					
JZL-1/19-ZS-3	MP301137	RST-DS19R-TTP-70 kN	19	497	288	498	4,87
JZL-1/24-ZS-3	MP301138	RST-DS24R-TTP-70 kN	24	602	308	518	4,97
JZL-1/27-ZS-3	MP301139	RST-DS27R-TTP-70 kN	27	687	328	538	5,07
JZL-1/31-ZS-3	MP301140	RST-DS31R-TTP-70 kN	31	791	348	558	5,17
JZL-1/39-ZS-3	MP301141	RST-DS39R-TTP-70 kN	39	980	388	598	5,27
JZL-1/50-ZS-3	MP301142	RST-DS50R-TTP-70 kN	50	1254	448	658	5,47
		VILICA - OČKA					
JZL-2/19-ZS-3	MP301157	RST-DS19R-CTP-70 kN	19	497	288	513	4,34
JZL-2/24-ZS-3	MP301158	RST-DS24R-CTP-70 kN	24	602	308	533	4,44
JZL-2/27-ZS-3	MP301159	RST-DS27R-CTP-70 kN	27	687	328	553	4,54
JZL-2/31-ZS-3	MP301160	RST-DS31R-CTP-70 kN	31	791	348	573	4,64
JZL-2/39-ZS-3	MP301161	RST-DS39R-CTP-70 kN	39	980	388	613	4,74
JZL-2/50-ZS-3	MP301162	RST-DS50R-CTP-70 kN	50	1254	448	673	4,94
		OČKA – OČKA					
JZL-3/19-ZS-3	MP301177	RST-DS19R-TTP-70 kN	19	497	288	648	7,90
JZL-3/24-ZS-3	MP301178	RST-DS24R-TTP-70 kN	24	602	308	668	8,00
JZL-3/27-ZS-3	MP301179	RST-DS27R-TTP-70 kN	27	687	328	688	8,10
JZL-3/31-ZS-3	MP301180	RST-DS31R-TTP-70 kN	31	791	348	708	8,20
JZL-3/39-ZS-3	MP301181	RST-DS39R-TTP-70 kN	39	980	388	748	8,30
JZL-3/50-ZS-3	MP301182	RST-DS50R-TTP-70 kN	50	1254	448	808	8,50
		KARIKA – OČKA 90°					
JZL-4/19-ZS-3	MP301191	RST-DS19R-CTP-70 kN	19	497	288	663	7,37
JZL-4/24-ZS-3	MP301192	RST-DS24R- CTP -70 kN	24	602	308	683	7,47
JZL-4/27-ZS-3	MP301193	RST-DS27R- CTP -70 kN	27	687	328	703	7,57
JZL-4/31-ZS-3	MP301194	RST-DS31R- CTP -70 kN	31	791	348	723	7,67
JZL-4/39-ZS-3	MP301195	RST-DS39R- CTP -70 kN	39	980	388	763	7,77
JZL-4/50-ZS-3	MP301196	RST-DS50R- CTP -70 kN	50	1254	448	823	7,97
		OČKA – OČKA					
JZL-5/19-ZS-3	MP301217	RST-DS19R-ETR-70 kN	19	497	288	562	3,75
JZL-5/24-ZS-3	MP301218	RST-DS24R-ETR-70 kN	24	602	308	582	3,85
JZL-5/27-ZS-3	MP301219	RST-DS27R-ETR-70 kN	27	687	328	602	3,95
JZL-5/31-ZS-3	MP301220	RST-DS31R-ETR-70 kN	31	791	348	622	4,05
JZL-5/39-ZS-3	MP301221	RST-DS39R-ETR-70 kN	39	980	388	662	4,15
JZL-5/50-ZS-3	MP301222	RST-DS50R-ETR-70 kN	50	1254	448	722	4,35
		OČKA – OČKA					
JZL-6/19-ZS-3	MP301237	RST-DS19R-TTP-70 kN	19	497	288	693	5,21
JZL-6/24-ZS-3	MP301238	RST-DS24R-TTP-70 kN	24	602	308	713	5,31
JZL-6/27-ZS-3	MP301239	RST-DS27R-TTP-70 kN	27	687	328	733	5,41
JZL-6/31-ZS-3	MP301240	RST-DS31R-TTP-70 kN	31	791	348	753	5,51
JZL-6/39-ZS-3	MP301241	RST-DS39R-TTP-70 kN	39	980	388	793	5,61
JZL-6/50-ZS-3	MP301242	RST-DS50R-TTP-70 kN	50	1254	448	853	5,81

Zatezna stezaljka ZS-3 obuhvaća Al/Če vodiče od 50/8 do 120/20 (Ø 9,0 – 16,0)
Tension clamp ZS-3 for ACSR conductor 50/8 – 120/20 (Ø 9,0 – 16,0)

DVOSTRUKI NOSIVI LANAC 20 i 35 kV
DOUBLE SUSPENSION STRING 20 and 35 kV

METAL PRODUCT®

Tip lanca *String description*	**DNL-1/27-NS-1**	Pregled jednostrukih nosivih lanaca vidi na str. 18 *Single suspension string overview see on page 18*

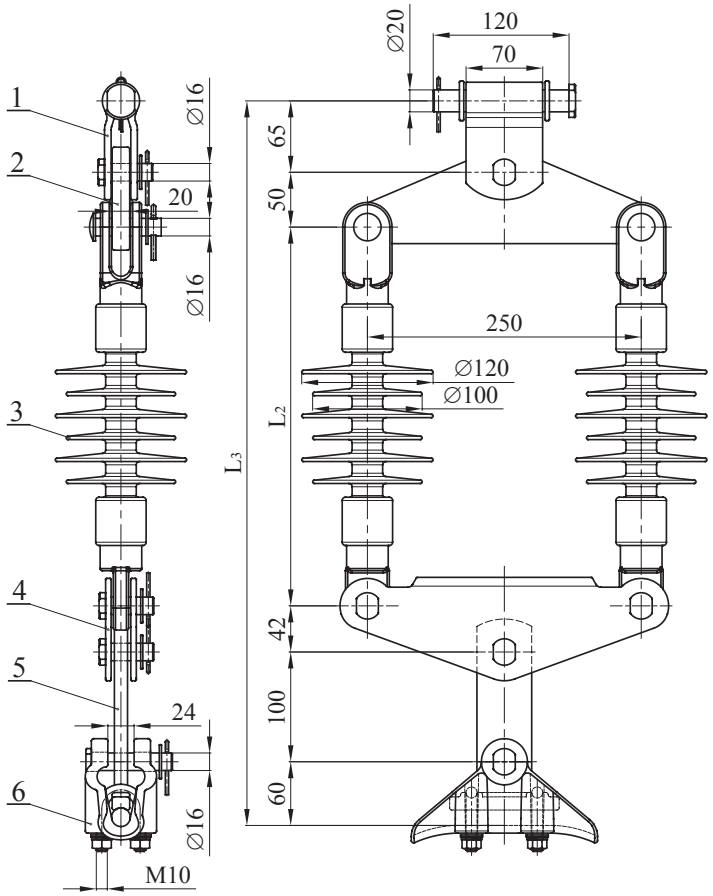

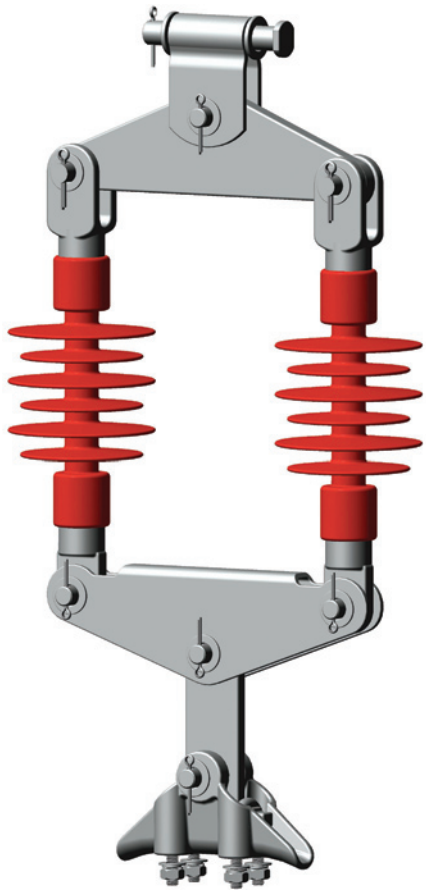

Poz. *Pos.*	Naziv pozicije *Description*	Tip *Type*	Količina *Quantity*	Materijal *Material*	Kataloški broj *Catalogue number*
1	Zastavica *Hinge*	ZL-70/16	1	Čelik v. Zn. *Steel h. d. g.*	MP395532
2	Odstojnik *Yoke*	ODST-1	1	Čelik v. Zn. *Steel h. d. g.*	MP395340
3	Štapni kompozitni izolator *Composite tension insulator*	**TYCO** ELECTRONICS	1	Čelik + Crveni EVA *Steel + Red EVA*	RST-DS27R-CTP-70kN (vidi str. → 25 – 29 ← *see page*)
4	Odstojnik *Yoke*	ODST-2/2	1	Čelik v. Zn. *Steel h. d. g*	MP395343
5	Produžnik ravni *Extension link straight*	PR-16	1	Čelik v. Zn. *Steel h. d. g*	MP395331
6	Nosiva stezaljka *Suspension clamp*	NS-1	1	Al. legura *Al. alloy*	MP395230

DVOSTRUKI NOSIVI LANAC 20 i 35 kV
DOUBLE SUSPENSION STRING 20 and 35 kV

METAL PRODUCT®

Tip lanca *String description*	**DNL-2/27-NS-1**	Pregled jednostrukih nosivih lanaca vidi na str. 18 *Single suspension string overview see on page 18*

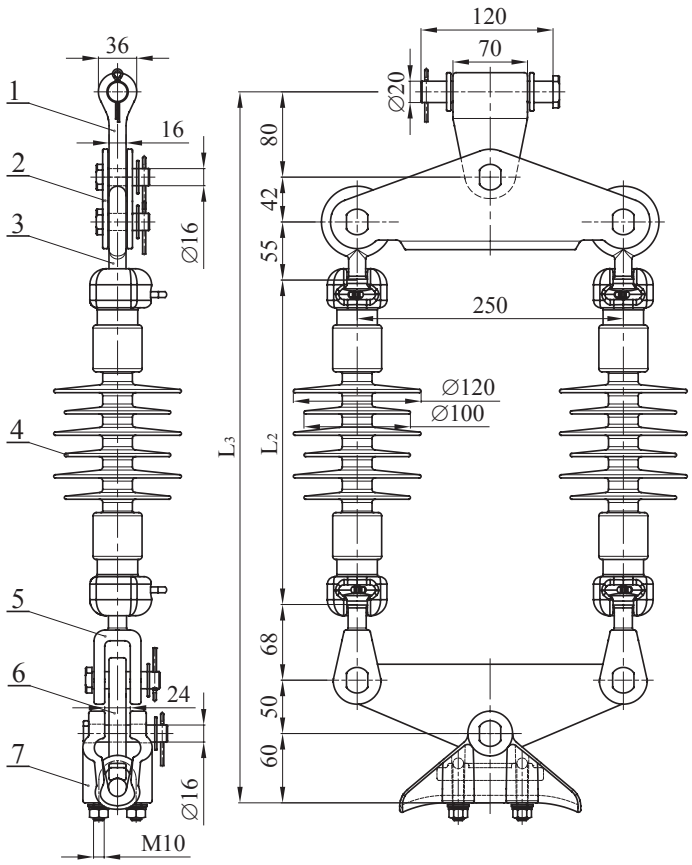

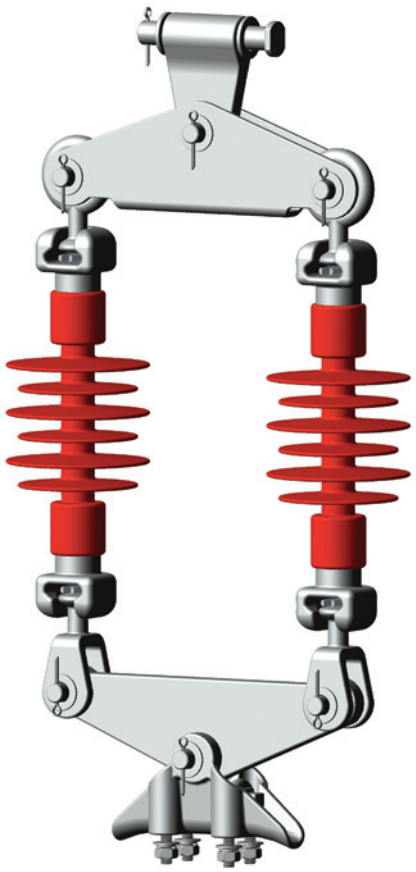

Poz. *Pos.*	Naziv pozicije *Description*	Tip *Type*	Količina *Quantity*	Materijal *Material*	Kataloški broj *Catalogue number*
1	Zastavica *Hinge*	ZL-70/16	1	Čelik v. Zn. *Steel h. d. g.*	MP395525
2	Odstojnik *Yoke*	ODST-2/2	1	Čelik v. Zn. *Steel h. d. g.*	MP395343
3	Očka s batićem *Ball eye*	OB-80	2	Čelik v. Zn. *Steel h. d. g.*	MP395100
4	Štapni kompozitni izolator *Composite tension insulator*	**TYCO** ELECTRONICS	2	Čelik + Crveni EVA *Steel + Red EVA*	RST-DS27R-SSP-70kN (vidi str. → 25 – 29 ← *see page*)
5	Vilica s batićem *Clevis ball*	VB-1	2	Čelik v. Zn. *Steel h. d. g*	MP396658
6	Odstojnik *Yoke*	ODST-1	1	Čelik v. Zn. *Steel h. d. g*	MP395340
7	Nosiva stezaljka *Suspension clamp*	NS-1	1	Al. legura *Al. alloy*	MP395230

DVOSTRUKI NOSIVI LANAC 20 i 35 kV
DOUBLE SUSPENSION STRING 20 and 35 kV

METAL PRODUCT®

Tip lanca *String description*	**DNL-3/27-NS-1**	Pregled jednostrukih nosivih lanaca vidi na str. 18 *Single suspension string overview see on page 18*

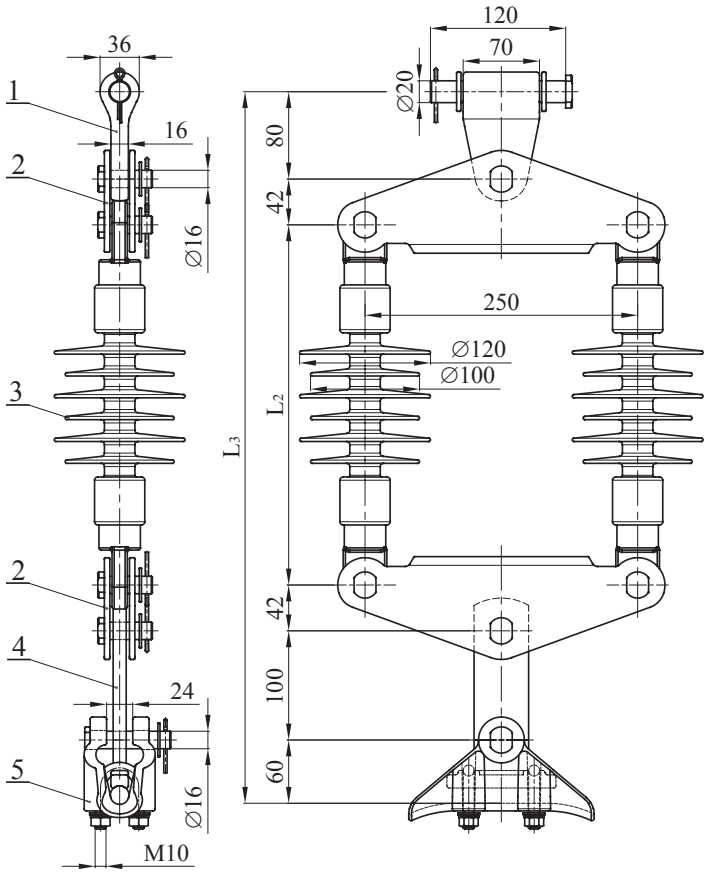

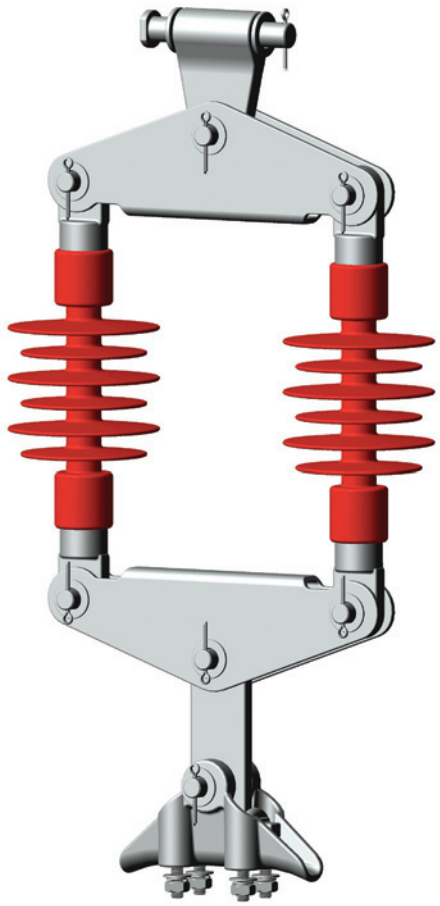

Poz. *Pos.*	Naziv pozicije *Description*	Tip *Type*	Količina *Quantity*	Materijal *Material*	Kataloški broj *Catalogue number*
1	Zastavica *Hinge*	ZL-70/16	1	Čelik v. Zn. *Steel h. d. g.*	MP395525
2	Odstojnik *Yoke*	ODST-2/2	2	Čelik v. Zn. *Steel h. d. g.*	MP395343
3	Štapni kompozitni izolator *Composite tension insulator*	TYCO ELECTRONICS	1	Čelik + Crveni EVA *Steel + Red EVA*	RST-DS27R-TTP-70kN (vidi str. → 25 – 29 ← *see page*)
4	Produžnik ravni *Extension link straight*	PR-16	1	Čelik v. Zn. *Steel h. d. g*	MP395331
5	Nosiva stezaljka *Suspension clamp*	NS-1	1	Al. legura *Al. alloy*	MP395230

DVOSTRUKI NOSIVI LANCI 20 i 35 kV
DOUBLE SUSPENSION STRINGS 20 and 35 kV

METAL PRODUCT®

Pregled dvostrukih nosivih lanaca / *Double suspension strings overview*

Tip lanca *String description*	Kataloški broj *Catalogue Number*	Tip izolatora *Insulator description*	Nazivna naponska klasa [kV] *Nominal voltage rating[kV]*	Duljina klizne staze [mm] *Creepage distance [mm]*	Duljina izolatora L_2 [mm] *Insulator lenght L_2 [mm]*	Duljina lanca L_3 [mm] *String loenght L_3 [mm]*	Masa [kg] *Mass [kg]*
		VILICA - OČKA					
DNL-1/19-NS-1	MP302020	RST-DS19R-CTP-70 kN	19	497	288	605	11,81
DNL-1/24-NS-1	MP302021	RST-DS24R-CTP-70 kN	24	602	308	625	11,91
DNL-1/27-NS-1	MP302022	RST-DS27R-CTP-70 kN	27	687	328	645	12,01
DNL-1/31-NS-1	MP302023	RST-DS31R-CTP-70 kN	31	791	348	665	12,11
DNL-1/39-NS-1	MP302024	RST-DS39R-CTP-70 kN	39	980	388	705	12,21
DNL-1/50-NS-1	MP302025	RST-DS50R-CTP-70 kN	50	1254	448	765	12,41
		ZDJELICA - ZDJELICA					
DNL-2/19-NS-1	MP302030	RST-DS19R-SSP-70 kN	19	497	288	643	11,35
DNL-2/24-NS-1	MP302031	RST-DS24R-SSP-70 kN	24	602	308	663	11,45
DNL-2/27-NS-1	MP302032	RST-DS27R-SSP-70 kN	27	687	328	683	11,55
DNL-2/31-NS-1	MP302033	RST-DS31R-SSP-70 kN	31	791	348	703	11,65
DNL-2/39-NS-1	MP302034	RST-DS39R-SSP-70 kN	39	980	388	743	11,75
DNL-2/50-NS-1	MP302035	RST-DS50R-SSP-70 kN	50	1254	448	803	11,95
		OČKA - OČKA					
DNL-3/19-NS-1	MP302040	RST-DS19R-TTP-70 kN	19	497	288	612	11,94
DNL-3/24-NS-1	MP302041	RST-DS24R-TTP-70 kN	24	602	308	632	12,04
DNL-3/27-NS-1	MP302042	RST-DS27R-TTP-70 kN	27	687	328	652	12,14
DNL-3/31-NS-1	MP302043	RST-DS31R-TTP-70 kN	31	791	348	672	12,24
DNL-3/39-NS-1	MP302044	RST-DS39R-TTP-70 kN	39	980	388	712	12,34
DNL-3/50-NS-1	MP302045	RST-DS50R-TTP-70 kN	50	1254	448	772	12,54

Nosiva stezaljka NS-1 obuhvaća Al/Če vodiče od 50/8 do 120/20 (Ø 9,0 – 17,0)
Suspension clamp NS-1 for ACSR conductor 50/8 - 120/20 (Ø 9,0 – 17,0)

DVOSTRUKI ZATEZNI LANAC 20 i 35 kV
DOUBLE TENSION STRING 20 and 35 kV

METAL PRODUCT®

Tip lanca *String description*	**DZL-1/27-ZS-2** **DZL-1/27-ZS-3**	*Pregled dvostrukih zateznih lanaca vidi na str. 23 i 24* *Double tension string overview see on page 23 and 24*

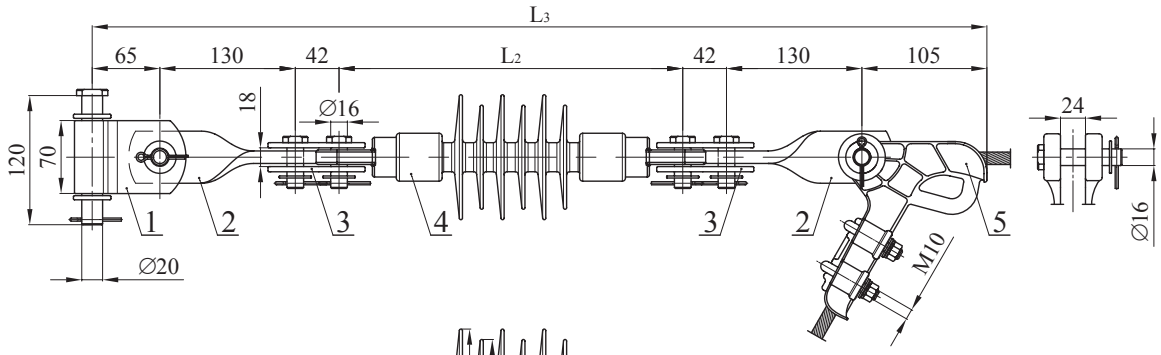

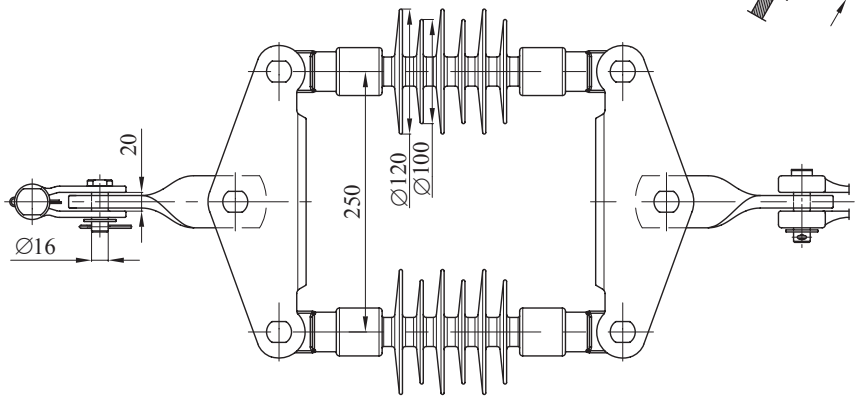

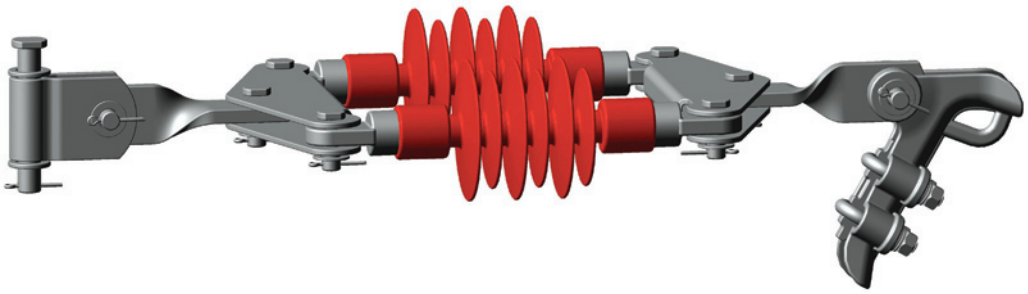

Poz. *Pos.*	Naziv pozicije *Description*	Tip *Type*	Količina *Quantity*	Materijal *Material*	Kataloški broj *Catalogue number*
1	Zastavica *Hinge*	ZL-70/16	1	Čelik v. Zn. *Steel h. d. g.*	MP395532
2	Produžnik zakrenuti Extension link 90°	PZ-16	2	Čelik v. Zn. *Steel h. d. g*	MP395330
3	Odstojnik *Yoke*	ODST-2/2	2	Čelik v. Zn. *Steel h. d. g.*	MP395343
4	Štapni kompozitni izolator *Composite tension insulator*	**TYCO** ELECTRONICS	2	Čelik + Crveni EVA *Steel + Red EVA*	RST-DS27R-TTP-70kN (vidi str. → 25 – 29 ← *see page*)
5	Zatezna stezaljka *Tension clamp*	ZS-2	1	Al. legura *Al. alloy*	MP395210
		ZS-3	1	*Al. legura* *Al. alloy*	MP395220

DVOSTRUKI ZATEZNI LANAC 20 i 35 kV
DOUBLE TENSION STRING 20 and 35 kV

METAL PRODUCT®

Tip lanca *String description*	**DZL-2/27-ZS-2** **DZL-2/27-ZS-3**	*Pregled dvostrukih zateznih lanaca vidi na str. 23 i 24* *Double tension string overview see on page 23 and 24*

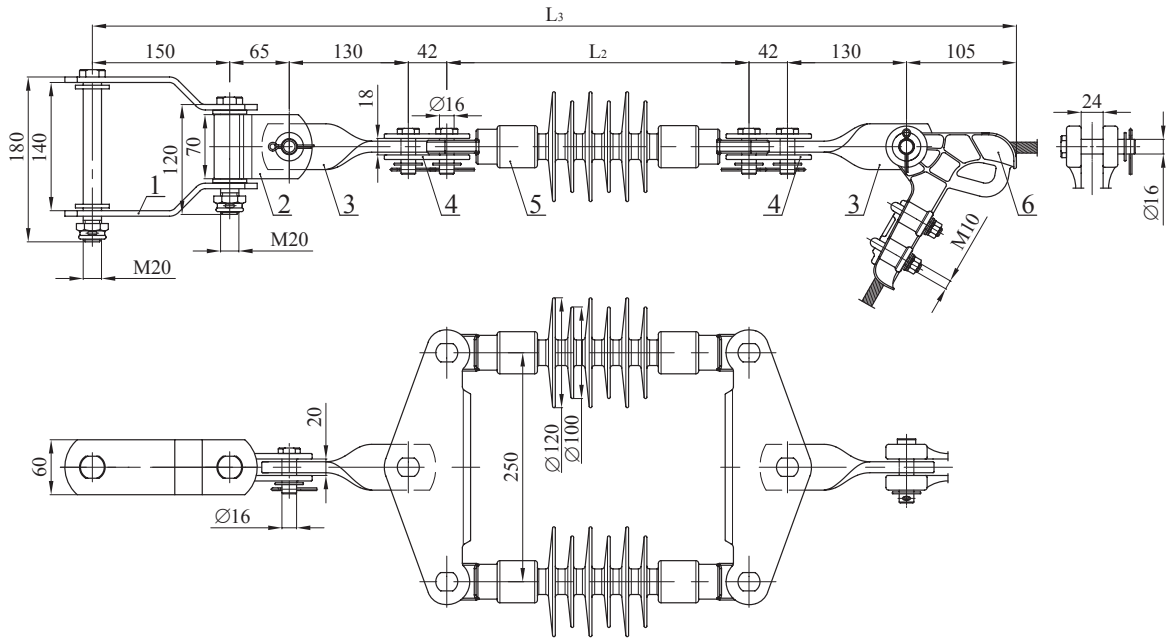

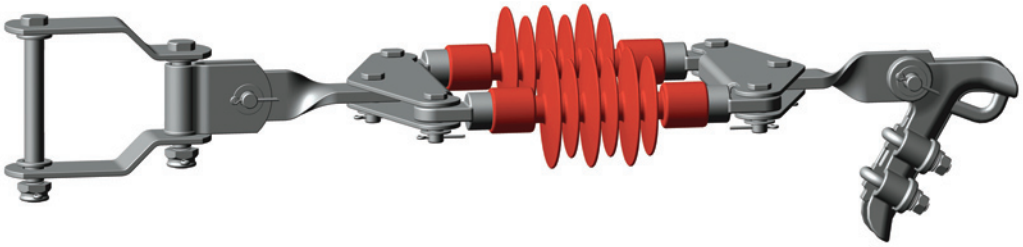

Poz. *Pos.*	Naziv pozicije *Description*	Tip *Type*	Količina *Quantity*	Materijal *Material*	Kataloški broj *Catalogue number*
1	Stremen jednostruki savinuti *Single shackle*	SZ-3	1	Čelik v. Zn. *Steel h. d. g.*	MP395127
2	Zastavica *Hinge*	ZL-70/16	1	Čelik v. Zn. *Steel h. d. g.*	MP395532
3	Produžnik zakrenuti Extension link 90°	PZ-16	2	Čelik v. Zn. *Steel h. d. g*	MP395330
4	Odstojnik *Yoke*	ODST-2/2	2	Čelik v. Zn. *Steel h. d. g.*	MP395343
5	Štapni kompozitni izolator *Composite tension insulator*	**TYCO** ELECTRONICS	2	Čelik + Crveni EVA *Steel + Red EVA*	RST-DS27R-TTP-70kN (vidi str. → 25 – 29 ← *see page*)
6	Zatezna stezaljka *Tension clamp*	ZS-2	1	Al. legura *Al. alloy*	MP395210
		ZS-3	1	*Al. legura* *Al. alloy*	MP395220

DVOSTRUKI ZATEZNI LANAC 20 i 35 kV
DOUBLE TENSION STRING 20 and 35 kV

METAL PRODUCT®

Tip lanca *String description*	**DZL-3/27-ZS-2** **DZL-3/27-ZS-3**	*Pregled dvostrukih zateznih lanaca vidi na str. 23 i 24* *Double tension string overview see on page 23 and 24*

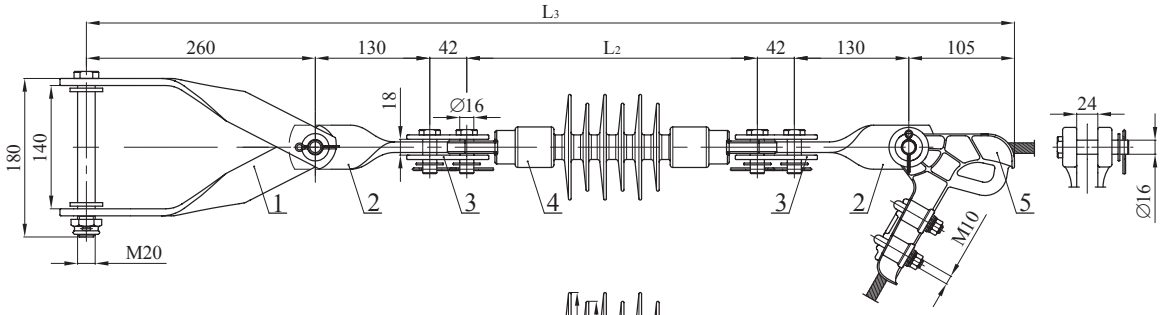

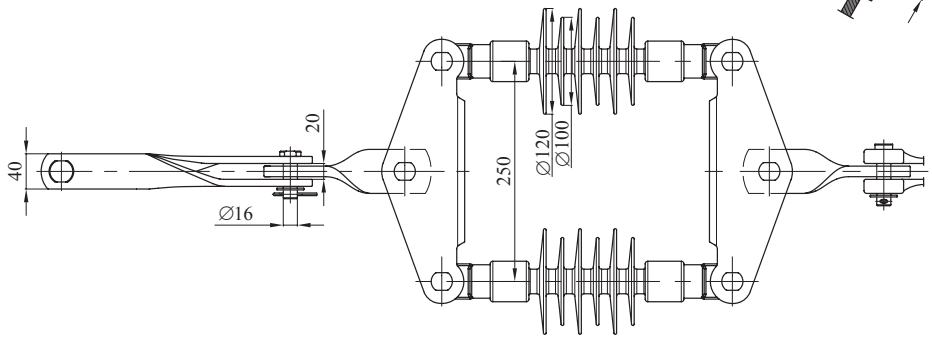

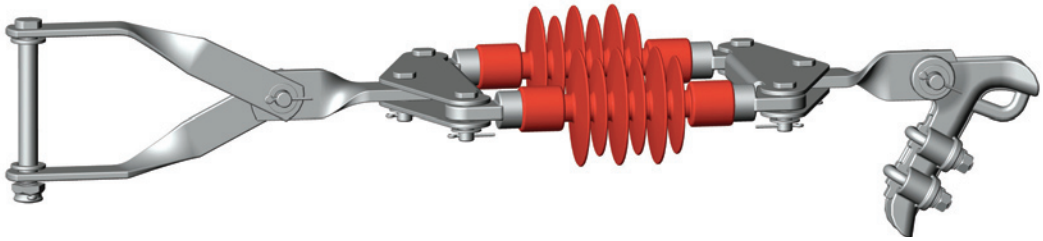

Poz. *Pos.*	Naziv pozicije *Description*	Tip *Type*	Količina *Quantity*	Materijal *Material*	Kataloški broj *Catalogue number*
1	Stremen jednostruki zakrenuti *Single shackle*	SZ-1	1	Čelik v. Zn. *Steel h. d. g.*	MP395125
2	Produžnik zakrenuti Extension link 90°	PZ-16	2	Čelik v. Zn. *Steel h. d. g*	MP395330
3	Odstojnik *Yoke*	ODST-2/2	2	Čelik v. Zn. *Steel h. d. g.*	MP395343
5	Štapni kompozitni izolator *Composite tension insulator*	**TYCO** ELECTRONICS	2	Čelik + Crveni EVA *Steel + Red EVA*	RST-DS27R-TTP-70kN (vidi str. → 25 – 29 ← *see page*)
5	Zatezna stezaljka *Tension clamp*	ZS-2	1	Al. legura *Al. alloy*	MP395210
		ZS-3	1	*Al. legura* *Al. alloy*	MP395220

DVOSTRUKI ZATEZNI LANAC 20 i 35 kV
DOUBLE TENSION STRING 20 and 35 kV

METAL PRODUCT®

Tip lanca *String description*	**DZL-4/27-UZS-1**	*Pregled dvostrukih zateznih lanaca vidi na str. 23 i 24* *Double tension string overview see on page 23 and 24*

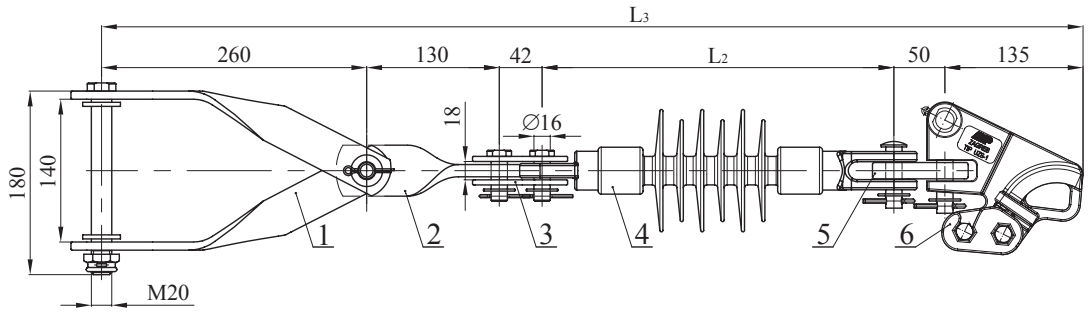

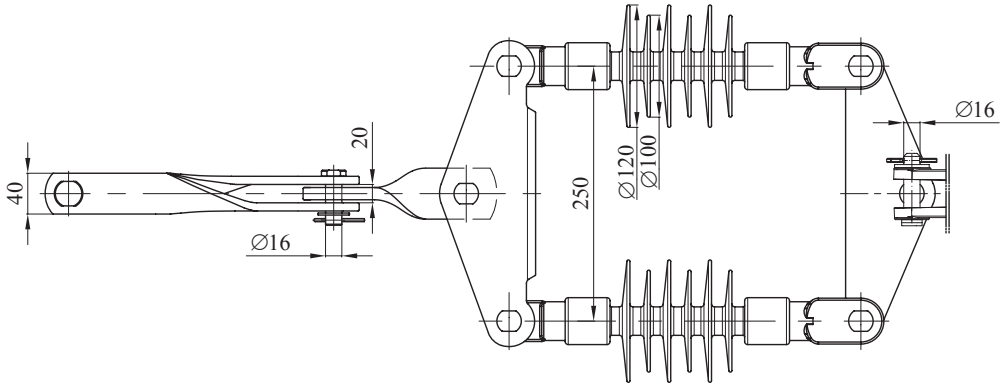

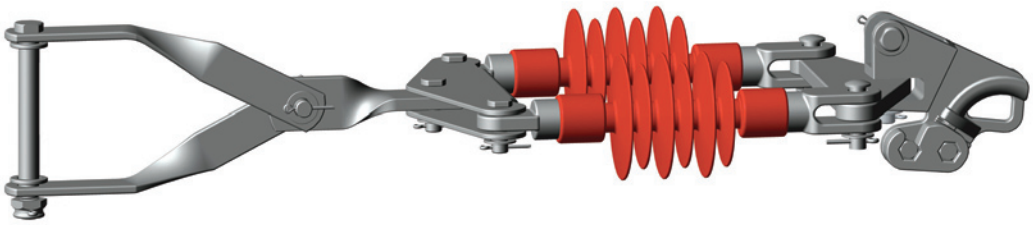

Poz. *Pos.*	Naziv pozicije *Description*	Tip *Type*	Količina *Quantity*	Materijal *Material*	Kataloški broj *Catalogue number*
1	Stremen jednostruki savinuti *Single shackle*	SZ-1	1	Čelik v. Zn. *Steel h. d. g.*	MP395125
2	*Produžnik zakrenuti* *Extension link 90°*	PZ-16	1	Čelik v. Zn. *Steel h. d. g.*	MP395330
3	Odstojnik *Yoke*	ODST-2/2	1	Čelik v. Zn. *Steel h. d. g*	MP395343
4	*Štapni kompozitni izolator* *Composite tension insulator*	**TYCO** ELECTRONICS	2	Čelik v. Zn. *Steel h. d. g.*	RST-DS27R-TCP-70kN (vidi str. → 25 – 29 ← *see page*)
5	Odstojnik *Yoke*	ODST-1	1	Čelik v. Zn. *Steel h. d. g*	MP395340
6	Univerzalna zatezna stezaljka *Universal tension clamp*	ZS-2	1	Čelik v. Zn. *Steel h. d. g*	MP395222

DVOSTRUKI ZATEZNI LANCI 20 i 35 kV
DOUBLE TENSION STRINGS 20 and 35 kV

METAL PRODUCT®

Pregled dvostrukih zateznih lanaca / *Double tension strings overview*

Tip lanca *String description*	Kataloški broj *Catalogue Number*	Tip izolatora *Insulator description*	Nazivna naponska klasa [kV] *Nominal voltage rating[kV]*	Duljina klizne staze [mm] *Creepage distance [mm]*	Duljina izolatora L_2 [mm] *Insulator lenght L_2 [mm]*	Duljina lanca L_3 [mm] *String loenght L_3 [mm]*	Masa [kg] *Mass [kg]*
		OČKA – OČKA					
DZL-1/19-ZS-2	MP302050	RST-DS19R-TTP-70 kN	19	497	288	802	13,18
DZL-1/24-ZS-2	MP302051	RST-DS24R-TTP-70 kN	24	602	308	822	13,28
DZL-1/27-ZS-2	MP302052	RST-DS27R-TTP-70 kN	27	687	328	842	13,38
DZL-1/31-ZS-2	MP302053	RST-DS31R-TTP-70 kN	31	791	348	862	13,48
DZL-1/39-ZS-2	MP302054	RST-DS39R-TTP-70 kN	39	980	388	902	13,58
DZL-1/50-ZS-2	MP302055	RST-DS50R-TTP-70 kN	50	1254	448	962	13,78
		OČKA – OČKA					
DZL-2/19-ZS-2	MP302070	RST-DS19R-TTP-70 kN	19	497	288	952	16,21
DZL-2/24-ZS-2	MP302071	RST-DS24R-TTP-70 kN	24	602	308	972	16,31
DZL-2/27-ZS-2	MP302072	RST-DS27R-TTP-70 kN	27	687	328	992	16,41
DZL-2/31-ZS-2	MP302073	RST-DS31R-TTP-70 kN	31	791	348	1012	16,51
DZL-2/39-ZS-2	MP302074	RST-DS39R-TTP-70 kN	39	980	388	1052	16,61
DZL-2/50-ZS-2	MP302075	RST-DS50R-TTP-70 kN	50	1254	448	1112	16,81
		OČKA – OČKA					
DZL-3/19-ZS-2	MP302090	RST-DS19R-TTP-70 kN	19	497	288	997	13,52
DZL-3/24-ZS-2	MP302091	RST-DS24R-TTP-70 kN	24	602	308	1017	13,62
DZL-3/27-ZS-2	MP302092	RST-DS27R-TTP-70 kN	27	687	328	1037	13,72
DZL-3/31-ZS-2	MP302093	RST-DS31R-TTP-70 kN	31	791	348	1057	13,82
DZL-3/39-ZS-2	MP302094	RST-DS39R-TTP-70 kN	39	980	388	1097	13,92
DZL-3/50-ZS-2	MP302095	RST-DS50R-TTP-70 kN	50	1254	448	1157	14,12
Zatezna stezaljka ZS-2 obuhvaća Al/Če vodiče od 25/4 do 70/12 (Ø 6,0 – 12,0) *Tension clamp ZS-2 for ACSR conductor 25/4 – 70/12 (Ø 6,0 – 12,0)*							
		OČKA – VILICA					
DZL-4/19-UZS	MP302111	RST-DS19R-TCP-70 kN	19	497	288	905	12,44
DZL-4/24-UZS	MP302112	RST-DS24R-TCP-70 kN	24	602	308	925	12,54
DZL-4/27-UZS	MP302113	RST-DS27R-TCP-70 kN	27	687	328	945	12,64
DZL-4/31-UZS	MP302114	RST-DS31R-TCP-70 kN	31	791	348	965	12,74
DZL-4/39-UZS	MP302115	RST-DS39R-TCP-70 kN	39	980	388	1005	12,84
DZL-4/50-UZS	MP302116	RST-DS50R-TCP-70 kN	50	1254	448	1065	13,04
Zatezna stezaljka UZS-1 obuhvaća Al/Če vodiče od 25/4 do 95/15 (Ø 6,0 – 14,0) *Tension clamp UZS-1 for ACSR conductor 25/4 – 95/15 (Ø 6,0 – 14,0)*							

DVOSTRUKI ZATEZNI LANCI 20 i 35 kV
DOUBLE TENSION STRINGS 20 and 35 kV

METAL PRODUCT®

Pregled dvostrukih zateznih lanaca / *Double tension strings overview*

Tip lanca *String description*	Kataloški broj *Catalogue Number*	Tip izolatora *Insulator description*	Nazivna naponska klasa [kV] *Nominal voltage rating[kV]*	Duljina klizne staze [mm] *Creepage distance [mm]*	Duljina izolatora L_2 [mm] *Insulator lenght L_2 [mm]*	Duljina lanca L_3 [mm] *String loenght L_3 [mm]*	Masa [kg] *Mass [kg]*
		OČKA – OČKA					
DZL-1/19-ZS-3	MP302056	RST-DS19R-TTP-70 kN	19	497	288	842	13,97
DZL-1/24-ZS-3	MP302057	RST-DS24R-TTP-70 kN	24	602	308	862	14,07
DZL-1/27-ZS-3	MP302058	RST-DS27R-TTP-70 kN	27	687	328	882	14,17
DZL-1/31-ZS-3	MP302059	RST-DS31R-TTP-70 kN	31	791	348	902	14,27
DZL-1/39-ZS-3	MP302060	RST-DS39R-TTP-70 kN	39	980	388	942	14,37
DZL-1/50-ZS-3	MP302061	RST-DS50R-TTP-70 kN	50	1254	448	1002	14,57
		OČKA – OČKA					
DZL-2/19-ZS-3	MP302076	RST-DS19R-TTP-70 kN	19	497	288	992	17,00
DZL-2/24-ZS-3	MP302077	RST-DS24R-TTP-70 kN	24	602	308	1012	17,10
DZL-2/27-ZS-3	MP302078	RST-DS27R-TTP-70 kN	27	687	328	1032	17,20
DZL-2/31-ZS-3	MP302079	RST-DS31R-TTP-70 kN	31	791	348	1052	17,30
DZL-2/39-ZS-3	MP302080	RST-DS39R-TTP-70 kN	39	980	388	1092	17,40
DZL-2/50-ZS-3	MP302081	RST-DS50R-TTP-70 kN	50	1254	448	1152	17,60
		OČKA – OČKA					
DZL-3/19-ZS-3	MP302096	RST-DS19R-TTP-70 kN	19	497	288	1037	14,31
DZL-3/24-ZS-3	MP302097	RST-DS24R-TTP-70 kN	24	602	308	1057	14,41
DZL-3/27-ZS-3	MP302098	RST-DS27R-TTP-70 kN	27	687	328	1077	14,51
DZL-3/31-ZS-3	MP302099	RST-DS31R-TTP-70 kN	31	791	348	1097	14,61
DZL-3/39-ZS-3	MP302100	RST-DS39R-TTP-70 kN	39	980	388	1137	14,71
DZL-3/50-ZS-3	MP302101	RST-DS50R-TTP-70 kN	50	1254	448	1197	14,91

Zatezna stezaljka ZS-3 obuhvaća Al/Če vodiče od 50/8 do 120/20 (Ø 9,0 – 16,0)
Tension clamp ZS-3 for ACSR conductor 50/8 – 120/20 (Ø 9,0 – 16,0)

1. Sustav označavanja izolatora / *Insulator´s descriptions sistem*

RST	-	DS	-	XX	-	R	-	Y_1Y_2	-	Z	-	70 kN

RST Nosivi i zatezni štapni kompozitni izolatori Raychem
Raychem Suspension and Tension composite insulators

DS Zatezni i nosivi tip izolatora
Deadend & Suspensions insulators type

XX Nazivna naponska klasa izolatora[kV]
Voltage rating class of insulators [kV]

R Boja kućišta (crvena)
Housing color (Red)

Y Slovna oznaka metalnih završetaka
Designation letters of end fittings

Y_1 Gornji završetak
Uperr end

Y_2 Donji završetak
Bottom end

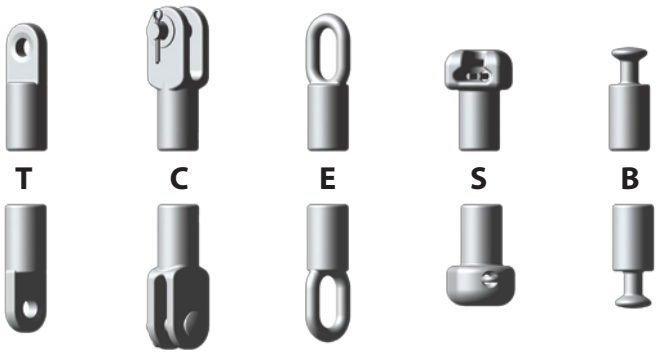

Z Međusobna orijentacija završetaka
Orientation of end fittings

P Paralelno
Parallel

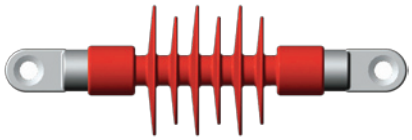

R Zakrenuto za 90°
Rotated 90°

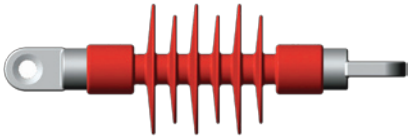

70 kN Deklarirano mehaničko opterećenje [kN]
Specified Mechanical Load (SML) [kN]

2. Električne i mehaničke vrijednosti / Electrical and mechanical parametars

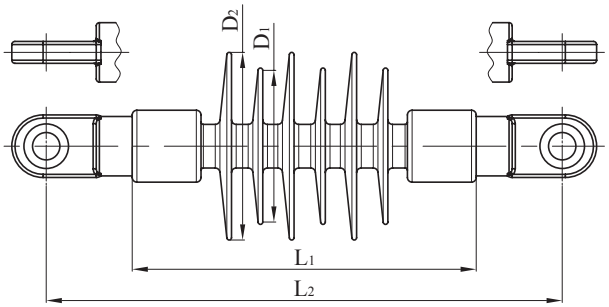

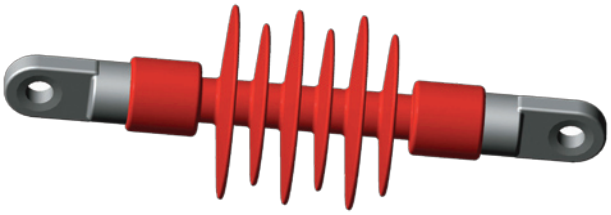

Nazivna naponska klasa izolatora *Nominal insulator voltage rating class*	[kV]	RST-DS 19	RST-DS 24	RST-DS 27	RST-DS 31	RST-DS 39	RST-DS 50
Duljina puzne staze *Creepage distance*	[mm]	497	602	687	791	980	1254
IEC klasa onečišćenja* za nazivni napon mreže 12/20 (24) *IEC polution class* for system voltage*	[kV]	c	d		e	-	-
20/35 (38)		-	a	b	c	d	e
Preskočna udaljenost u zraku *Dry arc distance*	[mm]	205	227	244	267	307	364
Duljina izolatora L_1/L_2 (za završetke "očka-očka") *Insulator length L_1/L_2 (for end fittings "tongue-tongue")*	[mm]	188/290	208/310	224/330	248/350	288/390	348/450
Promjer šešira D_1/D_2 *Diameter of sheds D_1/D_2*	[mm]	100/120	100/120	100/120	100/120	100/120	100/120
Broj rebara (manji + veći) *No. of sheds (smaller + larger)*	[kom]	2+2	2+3	3+3	3+4	4+5	6+6
Materijal kućišta / jezgre** *Housing / rod material***		EVA/ RBGF	EVA/ RBGF	EVA/ RBGF	EVA/ RBGF	EVA/ RBGF	EVA/ RBGF
Deklarirano mehaničko opterećenje (SML) *Routine Test Load (SML)*	[kN]	70	70	70	70	70	70
Deklarirano rutinsko opterećenje (RTL) *Routine Test Load (RTL)*	[kN]	35	35	35	35	35	35
Preskočni izmjenični napon u suhom *AC dry flashover voltage*	[kV]	95	103	100	117	131	151
Preskočni izmjenični napon u mokrom *AC wet flashover voltage*	[kV]	70	76	80	89	103	123
Nazivni podnosivi izmjenični napon u suhom *AC dry withstand voltage*	[kV]	85	89	85	101	114	131
Nazivni podnosivi izmjenični napon u mokrom *AC wet withstand voltage*	[kV]	60	59	70	73	86	105
Nazivni podnosivi udarni napon u suhom (pozitivni) *Dry lighting impulse withstand voltage (positive)*	[kV]	145	155	165	200	220	250
Masa izolatora (za završetke "očka-očka") *Insulator weight (for end fittings "tongue-tongue")*	[kg]	1,3	1,4	1,5	1,7	2,0	2,2

*Normirane specifične duljine puznih staza (USCD) prema IEC 60815-3
Unified Specific Creepage Distance (USCD) acc. IEC 60815-3

a - vrlo lagano / *very light* ≥ 22 mm/kV · ($U_m/\sqrt{3}$)
b - lagano / *light* ≥ 27,8 mm/kV · ($U_m/\sqrt{3}$)
c - srednje / *medium* ≥ 34,7 mm/kV · ($U_m/\sqrt{3}$)
d - teško / *heavy* ≥ 43,3 mm/kV · ($U_m/\sqrt{3}$)
e - vrlo teško / *very heavy* ≥ 57,7 mm/kV · ($U_m/\sqrt{3}$)

**EVA - Ethilene Vinil Acetate (polymer)

RBGF- Staklena vlakna impregnirana polimernom smolom
RBGF- Resin Bonded Glass Fibre

3. Dimenzije i oznake metalnih završetaka / Dimension and description of end fittings

Y1 - gornji završetak / *uperr end fitting*

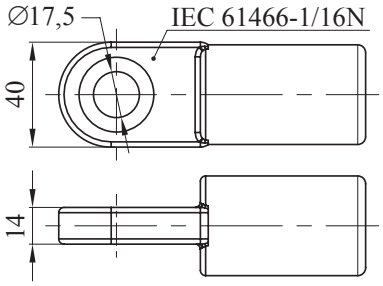

T OČKA / *TONGUE*

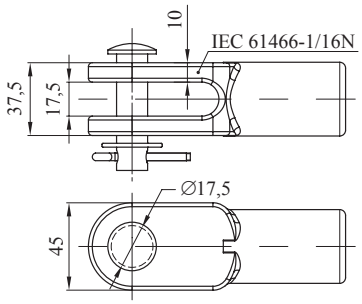

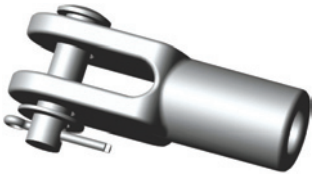

C VILICA / *CLEVIS*

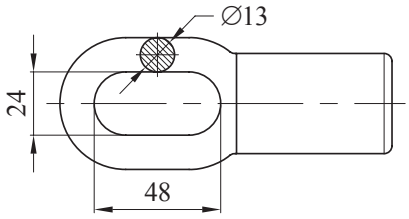

E KARIKA / *EYE*

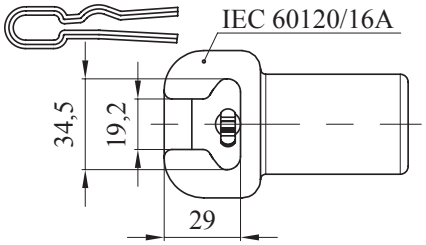

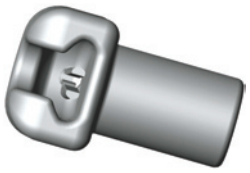

S ZDJELICA / *SOCKET*

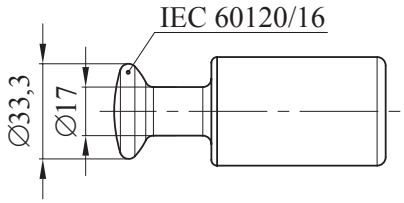

B BATIĆ / *BALL*

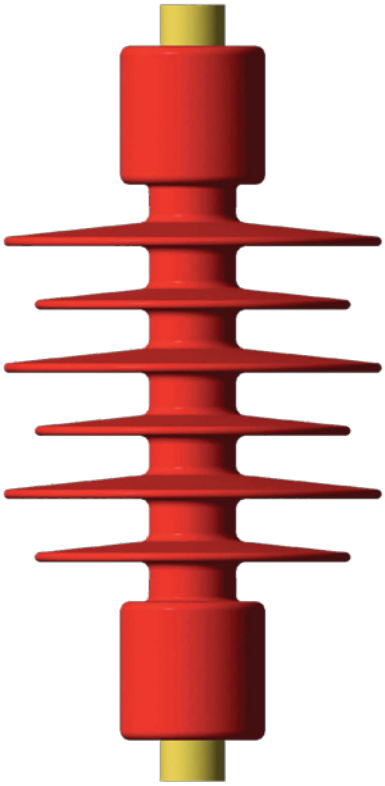

Y2 - donji završetak / *bottom end fitting*

4. Konfiguracije izolatora i oznake za naručivanje / *Insulators configurations and ordering description*

Očka – očka paralelno / *Tongue – tongue parallel*

Narudžbena oznaka *Ordering description*	Kataloški broj *Catalogue number*
RST-DS19R-TTP-70kN	Y350012
RST-DS24R-TTP-70kN	Y350013
RST-DS27R-TTP-70kN	Y350014
RST-DS31R-TTP-70kN	Y350015
RST-DS39R-TTP-70kN	Y350016
RST-DS50R-TTP-70kN	Y350017

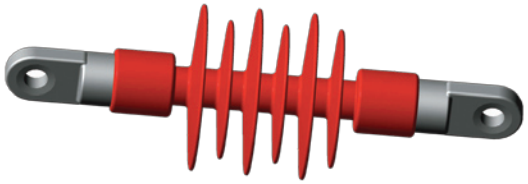

Očka – očka zakrenuto 90° / *Tongue – tongue rotated 90°*

Narudžbena oznaka *Ordering description*	Kataloški broj *Catalogue number*
RST-DS19R-TTR-70kN	Y350022
RST-DS24R-TTR-70kN	Y350023
RST-DS27R-TTR-70kN	Y350024
RST-DS31R-TTR-70kN	Y350025
RST-DS39R-TTR-70kN	Y350026
RST-DS50R-TTR-70kN	Y350027

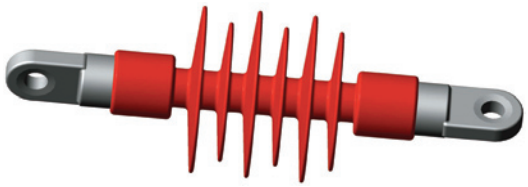

Karika – očka paralelno / *Eye – tongue parallel*

Narudžbena oznaka *Ordering description*	Kataloški broj *Catalogue number*
RST-DS19R-ETP-70kN	Y350032
RST-DS24R-ETP-70kN	Y350033
RST-DS27R-ETP-70kN	Y350034
RST-DS31R-ETP-70kN	Y350035
RST-DS39R-ETP-70kN	Y350036
RST-DS50R-ETP-70kN	Y350037

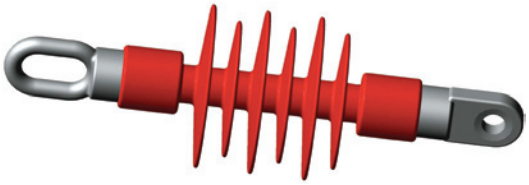

Karika – očka zakrenuto 90° / *Eye – tongue rotated 90°*

Narudžbena oznaka *Ordering description*	Kataloški broj *Catalogue number*
RST-DS19R-ETR-70kN	Y350042
RST-DS24R-ETR-70kN	Y350043
RST-DS27R-ETR-70kN	Y350044
RST-DS31R-ETR-70kN	Y350045
RST-DS39R-ETR-70kN	Y350046
RST-DS50R-ETR-70kN	Y350047

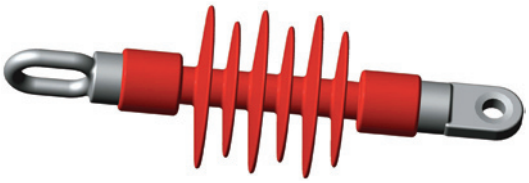

4. Konfiguracije izolatora i oznake za naručivanje / *Insulators configurations and ordering description*

Zdjelica - batić / *Socket - Ball*

Narudžbena oznaka *Ordering description*	Kataloški broj *Catalogue number*
RST-DS19R-SBP-70kN	Y350052
RST-DS24R-SBP-70kN	Y350053
RST-DS27R-SBP-70kN	Y350054
RST-DS31R-SBP-70kN	Y350055
RST-DS39R-SBP-70kN	Y350056
RST-DS50R-SBP-70kN	Y350057

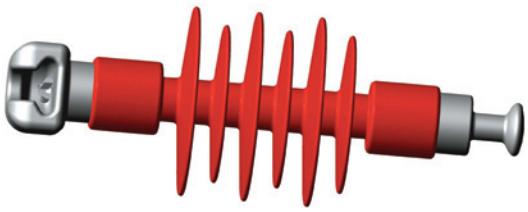

Zdjelica – zdjelica paralelno / *Socket – socket parallel*

Narudžbena oznaka *Ordering description*	Kataloški broj *Catalogue number*
RST-DS19R-SSP-70kN	Y350062
RST-DS24R-SSP-70kN	Y350063
RST-DS27R-SSP-70kN	Y350064
RST-DS31R-SSP-70kN	Y350065
RST-DS39R-SSP-70kN	Y350066
RST-DS50R-SSP-70kN	Y350067

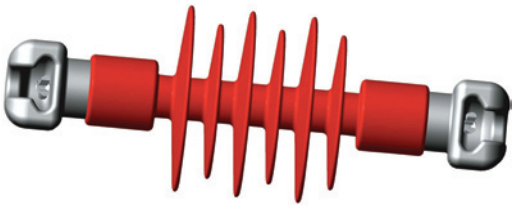

Vilica - očka paralelno / *Clevis – tongue parallel*

Narudžbena oznaka *Ordering description*	Kataloški broj *Catalogue number*
RST-DS19R-CTP-70kN	Y350072
RST-DS24R-CTP-70kN	Y350073
RST-DS27R-CTP-70kN	Y350074
RST-DS31R-CTP-70kN	Y350075
RST-DS39R-CTP-70kN	Y350076
RST-DS50R-CTP-70kN	Y350077

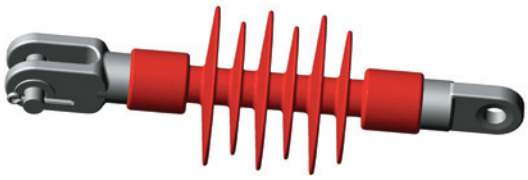

Vilica – očka zakrenuto 90° / *Clevis – tongue rotated 90°*

Narudžbena oznaka *Ordering description*	Kataloški broj *Catalogue number*
RST-DS19R-CTR-70kN	Y350082
RST-DS24R-CTR-70kN	Y350083
RST-DS27R-CTR-70kN	Y350084
RST-DS31R-CTR-70kN	Y350085
RST-DS39R-CTR-70kN	Y350086
RST-DS50R-CTR-70kN	Y350087

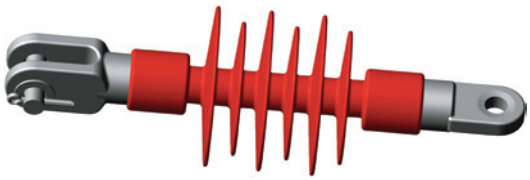

NOSIVA STEZALJKA ***SUSPENSION CLAMP***	Tip *Type*	**NS-1**	Kat. br. *Cat. No.*	**MP395230**

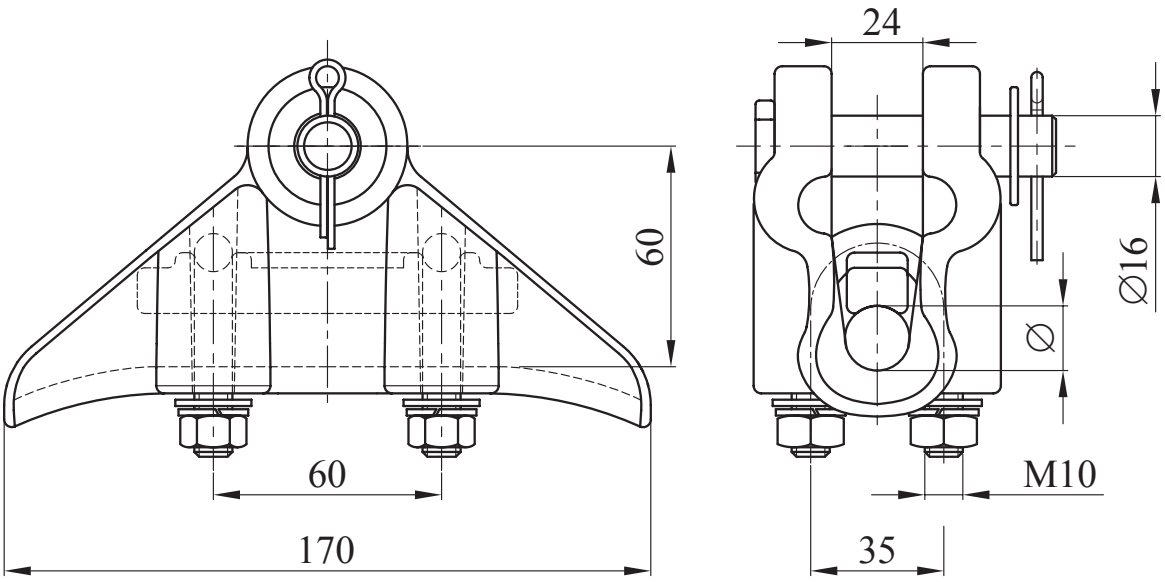

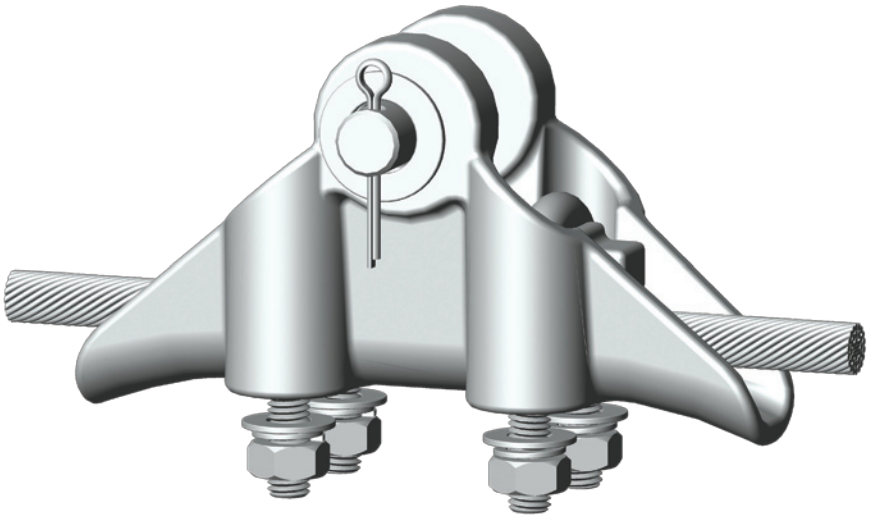

Minimalna prekidna sila	*Minimum breaking load*	60	kN
Masa	*Mass*	0,93	kg
Za uže: Al/Če 50/8 – 120/20 (Ø 9,0 – 17,0)	*For conductor: ACSR 50/8 – 120/20 (Ø 9,0 – 17,0)*		
Materijal: Al legura	*Material: Al alloy*		

ZATEZNA STEZALJKA ***TENSION CLAMP***	Tip *Type*	**ZS-2**	Kat. br. *Cat. No.*	**MP395210**

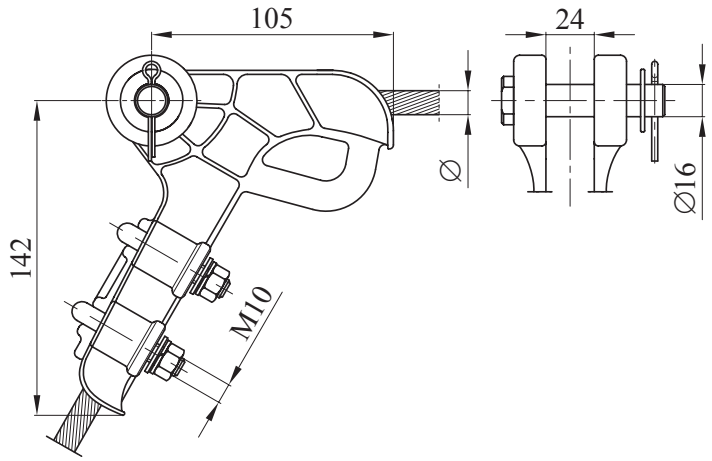

Minimalna prekidna sila	*Minimum breaking load*	35	kN
Masa	*Mass*	0,63	kg
Za uže: Al/Če 25/4 – 70/12 (Ø 6,0 – 12,0)	*For conductor: ACSR 25/4 – 70/12 (Ø 6,0 – 12,0)*		
Materijal: Al legura	*Material: Al alloy*		

ZATEZNA STEZALJKA ***TENSION CLAMP***	Tip *Type*	**ZS-3**	Kat. br. *Cat. No.*	**MP395220**

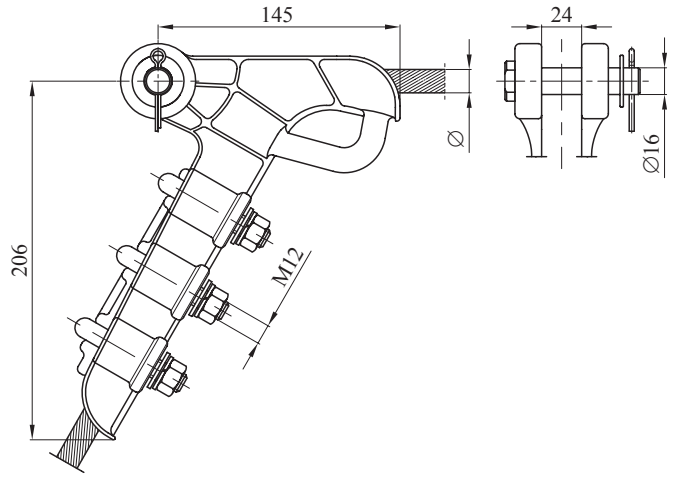

Minimalna prekidna sila	*Minimum breaking load*	60	kN
Masa	*Mass*	1,42	kg
Za uže: Al/Če 50/8 – 120/20 (Ø 9,0 – 16,0)	*For conductor: ACSR 50/8 – 120/20 (Ø 9,0 – 16,0)*		
Materijal: Al legura	*Material: Al alloy*		

OČKA S BATIĆEM *BALL EYE*	IEC 120/16	Tip *Type*	OB-80	Kat. br. *Cat. No.*	MP395100

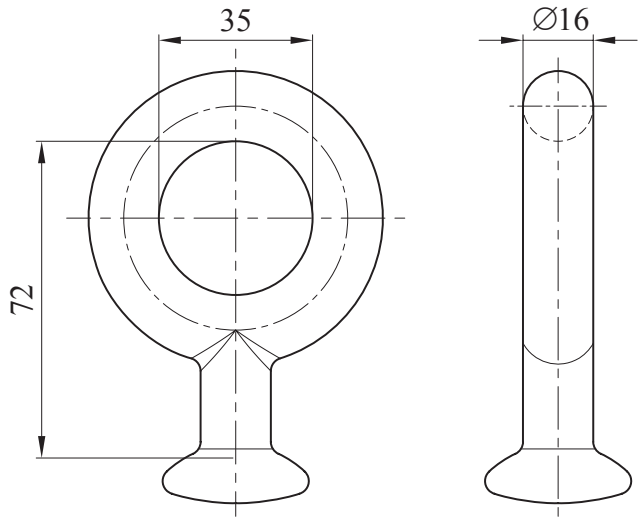

Minimalna prekidna sila	*Minimum breaking load*	80	kN
Masa	*Mass*	0,38	kg
Materijal: Čelik v. Zn	*Material: Steel h. d. g.*		

KARIKA S BATIĆEM *BALL EYE*	IEC 120/16	Tip *Type*	OUB-120	Kat. br. *Cat. No.*	MP395000

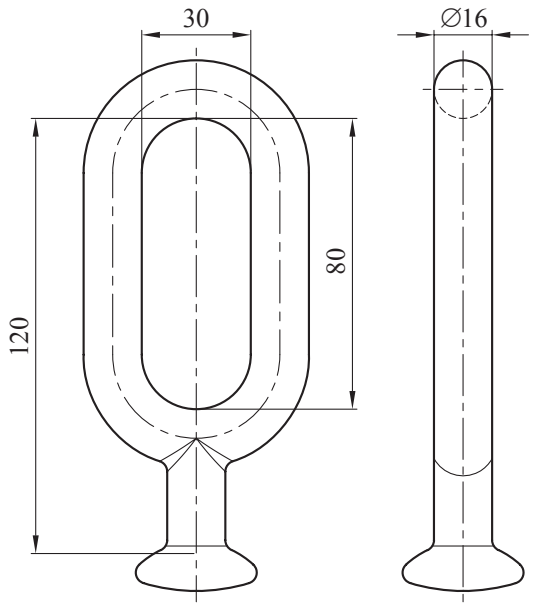

Minimalna prekidna sila	*Minimum breaking load*	80	kN
Masa	*Mass*	0,51	kg
Materijal: Čelik v. Zn	*Material: Steel h. d. g.*		

D STREMEN
D SUPPORT

Tip / *Type*: **D-120**

Kat. br. / *Cat. No.*: **MP395010**

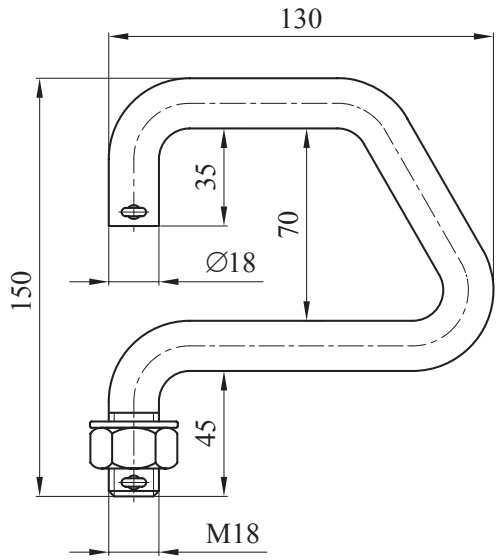

Minimalna prekidna sila	*Minimum breaking load*	120	kN
Masa	*Mass*	0,73	kg
Materijal: Čelik v. Zn	*Material: Steel h. d. g.*		

U STREMEN
U BOLT

Tip / *Type*: **UST-16-3**

Kat. br. / *Cat. No.*: **MP395014**

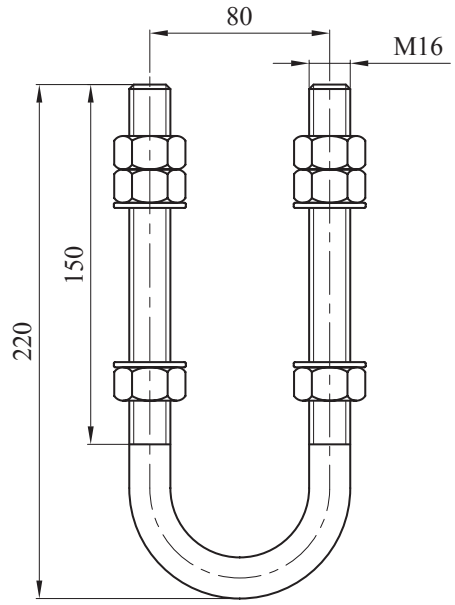

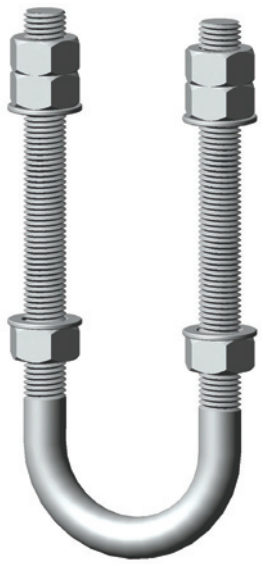

Minimalna prekidna sila	*Minimum breaking load*	120	kN
Masa	*Mass*	0,87	kg
Materijal: Čelik v. Zn	*Material: Steel h. d. g.*		

STREMEN JEDNOSTRUKI ZAKRENUTI *SINGLE SHACKLE*	Tip *Type*	SZ-1	Kat. br. *Cat. No.*	MP395125

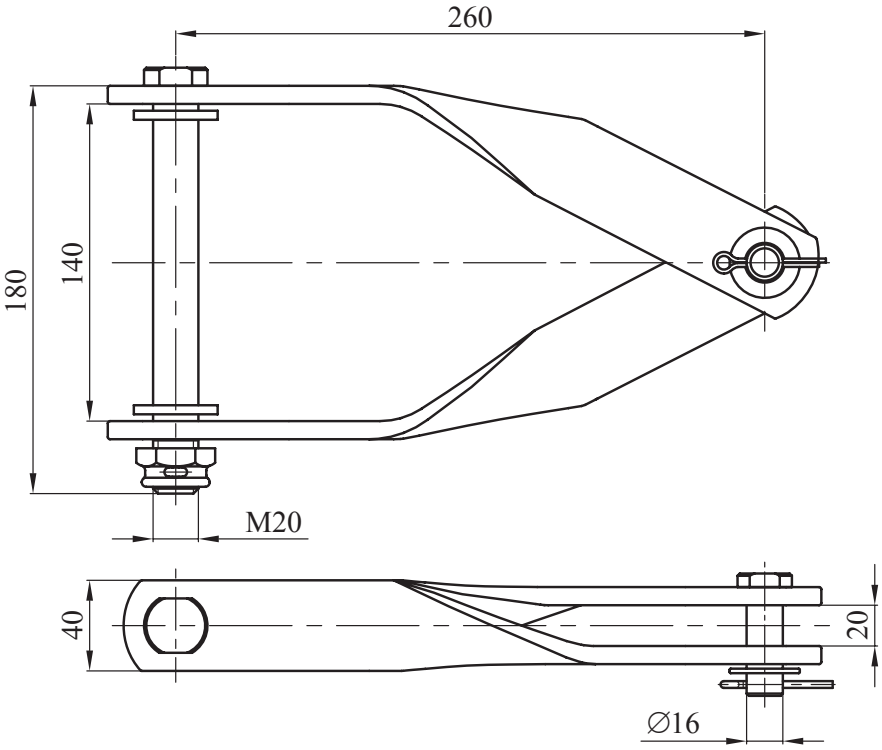

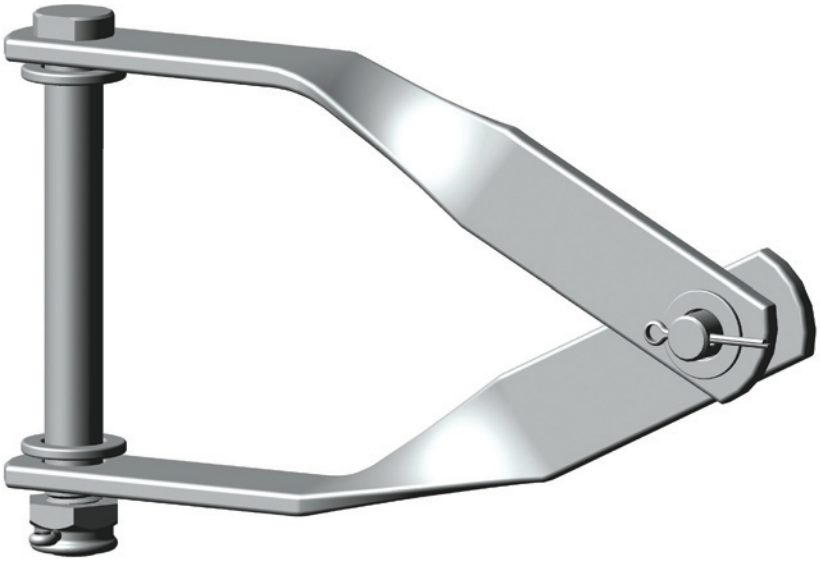

Minimalna prekidna sila	*Minimum breaking load*	80	kN
Masa	*Mass*	2,19	kg
Materijal: Čelik v. Zn	*Material: Steel h. d. g.*		

STREMEN DVOSTRUKI ZAKRENUTI *DOUBLE SHACKLE*	Tip *Type*	**SZ-2**	Kat. br. *Cat. No.*	**MP395129**

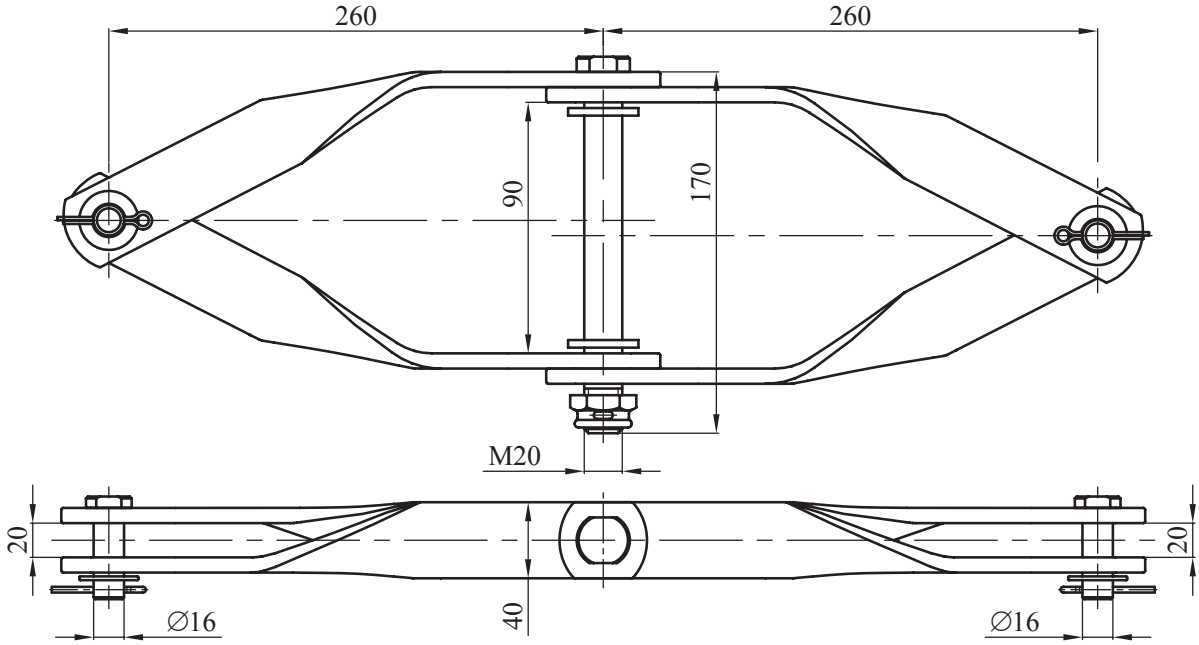

Minimalna prekidna sila	*Minimum breaking load*	80	kN
Masa	*Mass*	3,76	kg
Materijal: Čelik v. Zn	*Material: Steel h. d. g.*		

STREMEN JEDNOSTRUKI SAVINUTI *SINGLE SHACKLE*	Tip *Type*	**SZ-3**	Kat. br. *Cat. No.*	**MP395127**

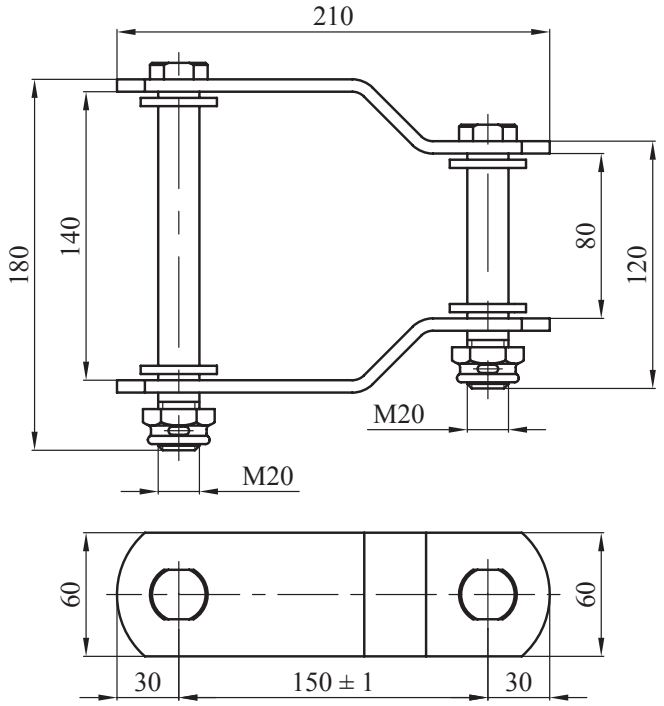

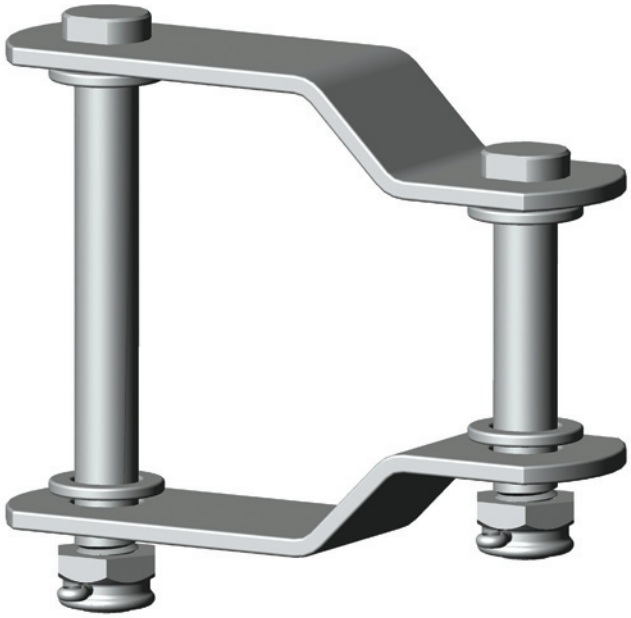

Minimalna prekidna sila	*Minimum breaking load*	80	kN
Masa	*Mass*	3,03	kg
Materijal: Čelik v. Zn	*Material: Steel h. d. g.*		

STREMEN DVOSTRUKI SAVINUTI *DOUBLE SHACKLE*	Tip *Type*	**SZ-4**	Kat. br. *Cat. No.*	**MP395128**

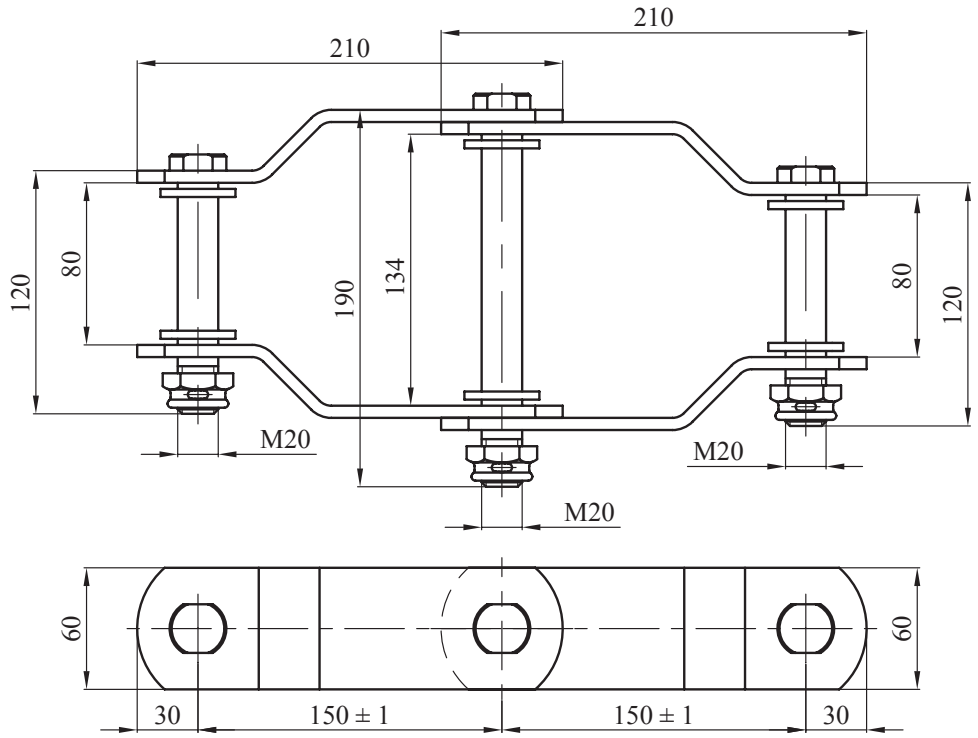

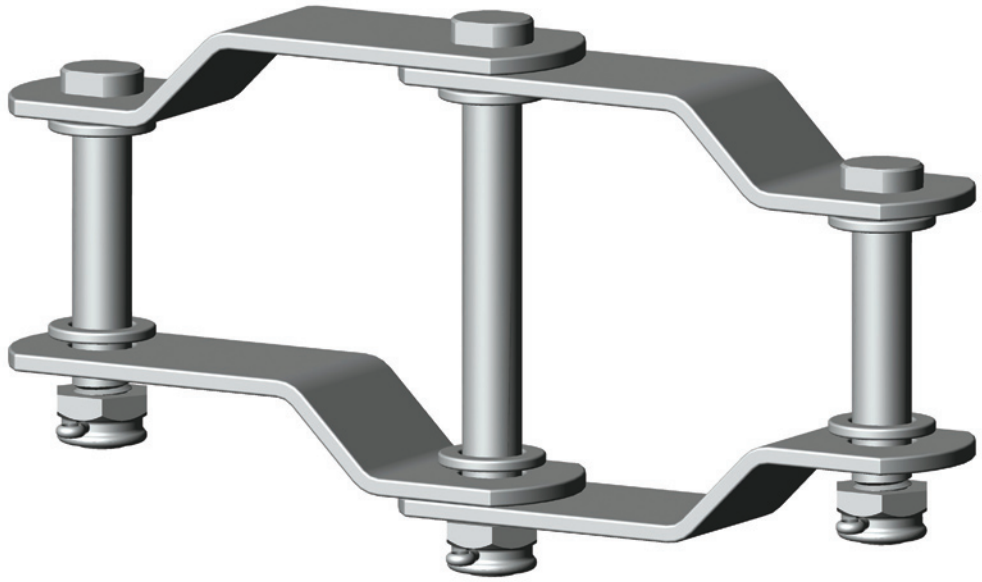

Minimalna prekidna sila	*Minimum breaking load*	80	kN
Masa	*Mass*	5,55	kg
Materijal: Čelik v. Zn	*Material: Steel h. d. g.*		

PLOČICA ČELIČNA *STEEL PLATE*	Tip *Type*	**PL-210 S**	Kat. br. *Cat. No.*	**MP395123**

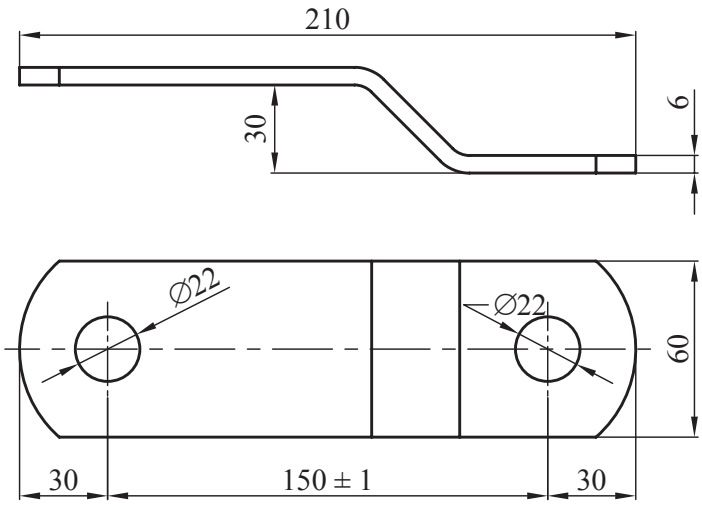

Minimalna prekidna sila	*Minimum breaking load*	70	kN
Masa	*Mass*	1,01	kg
Materijal: Čelik v. Zn	*Material: Steel h. d. g.*		

PLOČICA ČELIČNA *STEEL PLATE*	Tip *Type*	**PL-270 S**	Kat. br. *Cat. No.*	**MP395124**

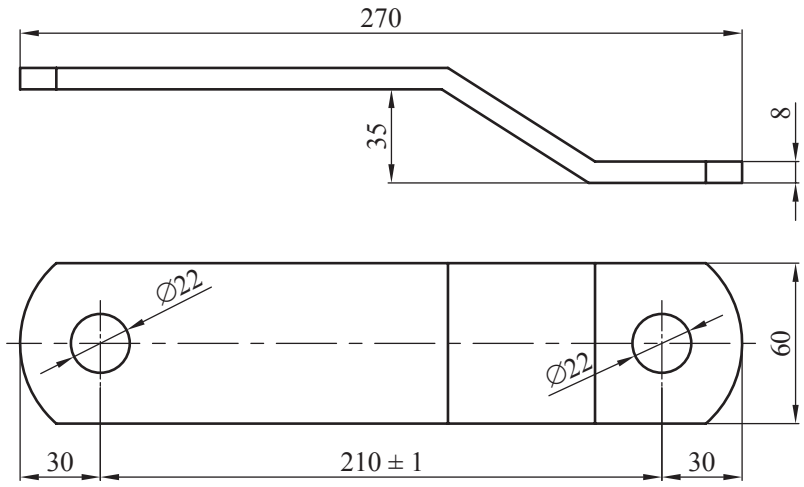

Minimalna prekidna sila	*Minimum breaking load*	120	kN
Masa	*Mass*	1,10	kg
Materijal: Čelik v. Zn	*Material: Steel h. d. g.*		

PRODUŽNIK ZAKRENUTI ***EXTENSION LINK 90°***	Tip *Type*	**PZ-16**	Kat. br. *Cat. No.*	**MP395330**

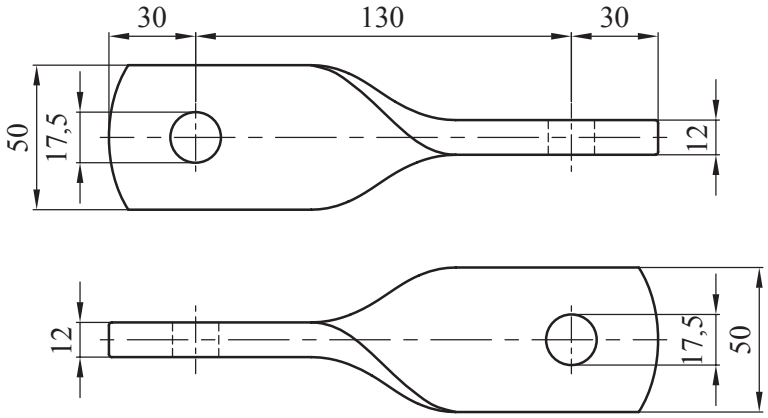

Minimalna prekidna sila	*Minimum breaking load*	70	kN
Masa	*Mass*	0,85	kg
Materijal: Čelik v. Zn	*Material: Steel h. d. g.*		

PRODUŽNIK RAVNI ***EXTENSION LINK***	Tip *Type*	**PR-16**	Kat. br. *Cat. No.*	**MP395331**

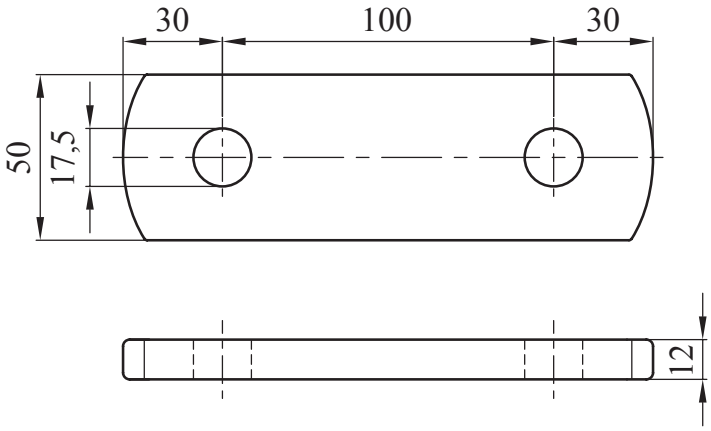

Minimalna prekidna sila	*Minimum breaking load*	120	kN
Masa	*Mass*	0,69	kg
Materijal: Čelik v. Zn	*Material: Steel h. d. g.*		

ODSTOJNIK ***YOKE***	Tip *Type*	**ODST-1**	Kat. br. *Cat. No.*	**MP395340**

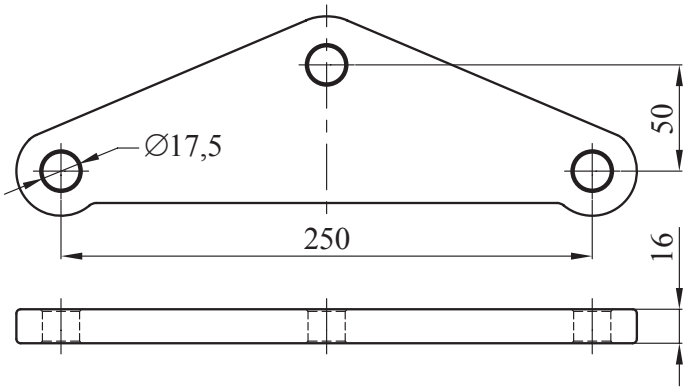

Minimalna prekidna sila	*Minimum breaking load*	80	kN
Masa	*Mass*	2,14	kg
Materijal: Čelik v. Zn	*Material: Steel h. d. g.*		

ODSTOJNIK ***YOKE***	Tip *Type*	**ODST-2**	Kat. br. *Cat. No.*	**MP395342**

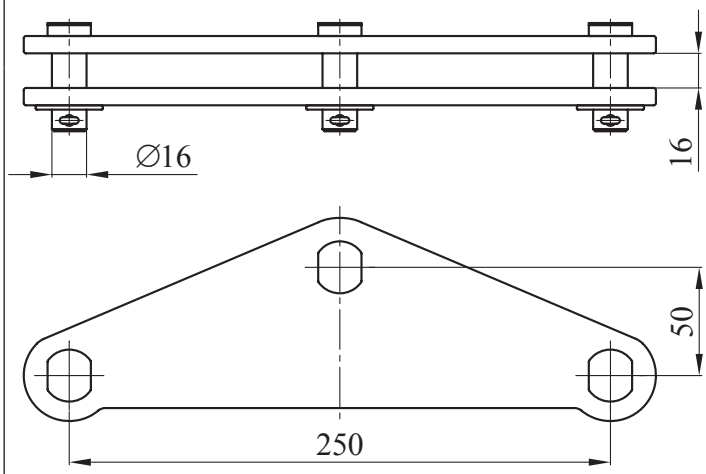

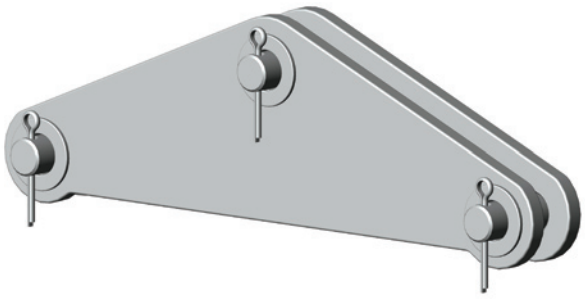

Minimalna prekidna sila	*Minimum breaking load*	80	kN
Masa	*Mass*	2,62	kg
Materijal: Čelik v. Zn	*Material: Steel h. d. g.*		

ODSTOJNIK ***YOKE***	Tip *Type*	**ODST-2/2**	Kat. br. *Cat. No.*	**MP395343**

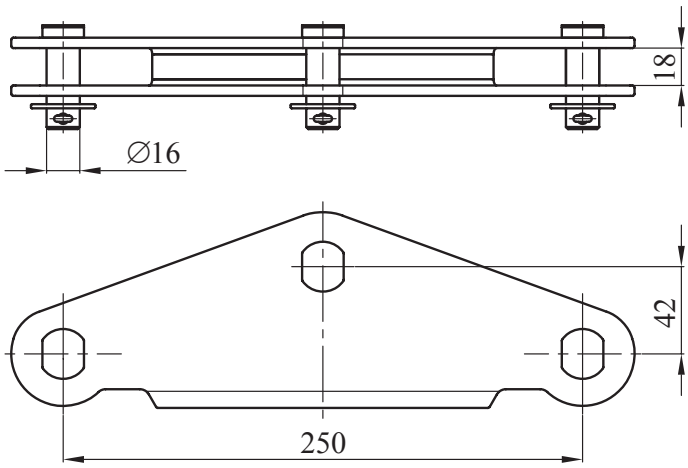

Minimalna prekidna sila	*Minimum breaking load*	120	kN
Masa	*Mass*	2,80	kg
Materijal: Čelik v. Zn	*Material: Steel h. d. g.*		

ODSTOJNIK ***YOKE***	Tip *Type*	**ODST-3**	Kat. br. *Cat. No.*	**MP395344**

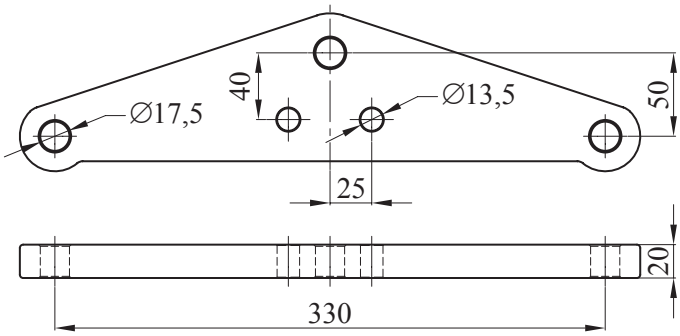

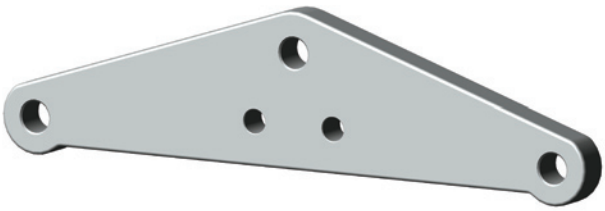

Minimalna prekidna sila	*Minimum breaking load*	120	kN
Masa	*Mass*	3,41	kg
Materijal: Čelik v. Zn	*Material: Steel h. d. g.*		

ZASTAVICA ***HINGE***	Tip *Type*	**ZL-55/16**	Kat. br. *Cat. No.*	**MP395530**

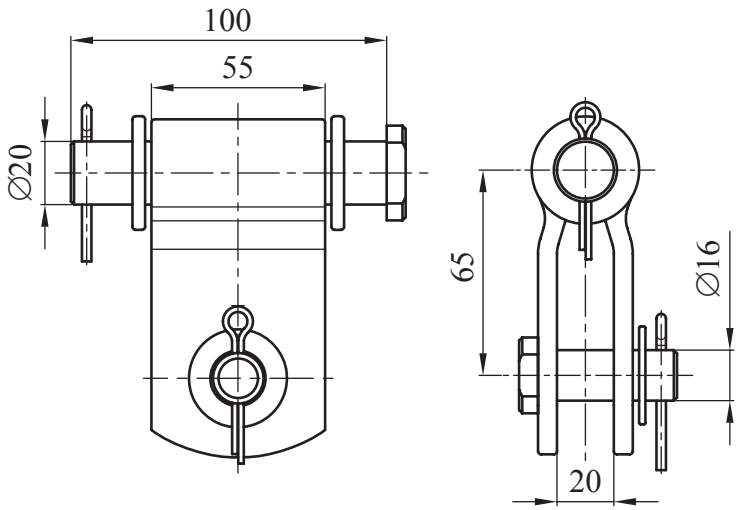

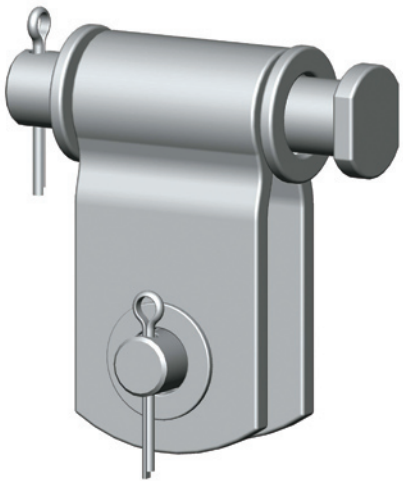

Minimalna prekidna sila	*Minimum breaking load*	70	kN
Masa	*Mass*	1,28	kg
Materijal: Čelik v. Zn	*Material: Steel h. d. g.*		

ZASTAVICA ***HINGE***	Tip *Type*	**ZL-70/16**	Kat. br. *Cat. No.*	**MP395532**

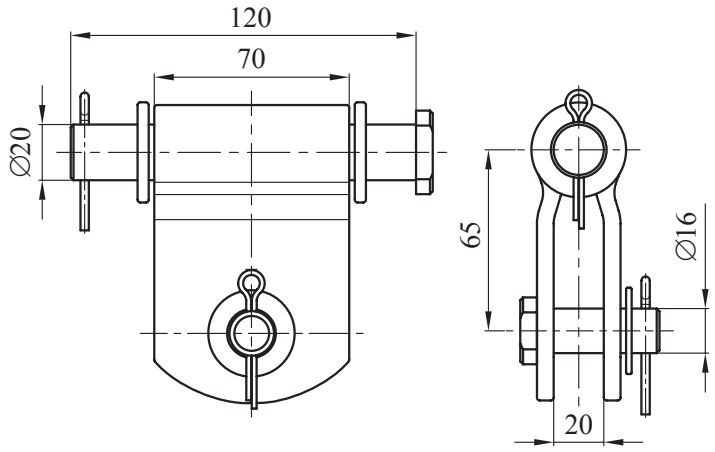

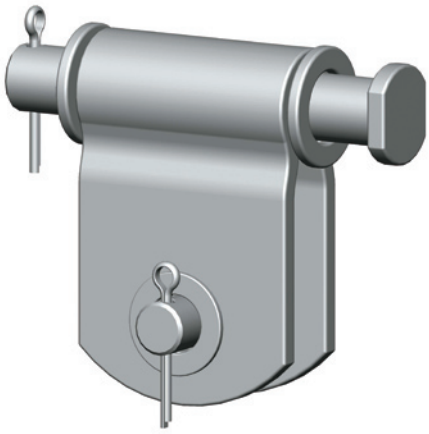

Minimalna prekidna sila	*Minimum breaking load*	80	kN
Masa	*Mass*	1,85	kg
Materijal: Čelik v. Zn	*Material: Steel h. d. g.*		

ZASTAVICA ***HINGE***	Tip *Type*	**ZK-55/16**	Kat. br. *Cat. No.*	**MP395521**

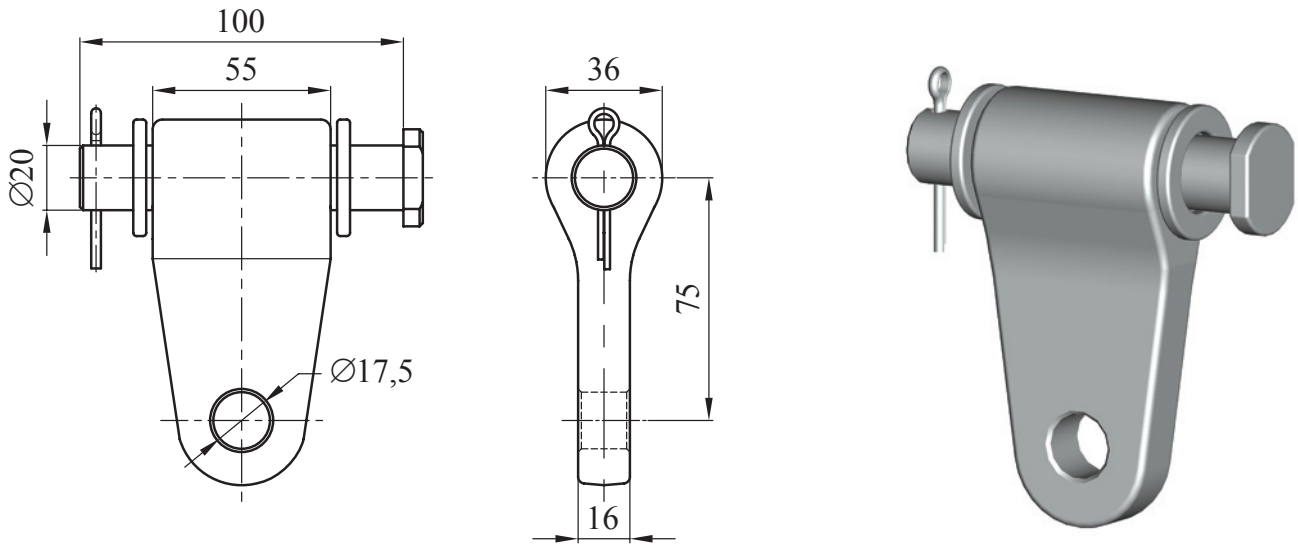

Minimalna prekidna sila	*Minimum breaking load*	120	kN
Masa	*Mass*	1,13	kg
Materijal: Čelik v. Zn	*Material: Steel h. d. g.*		

ZASTAVICA ***HINGE***	Tip *Type*	**ZK-70/16**	Kat. br. *Cat. No.*	**MP395525**

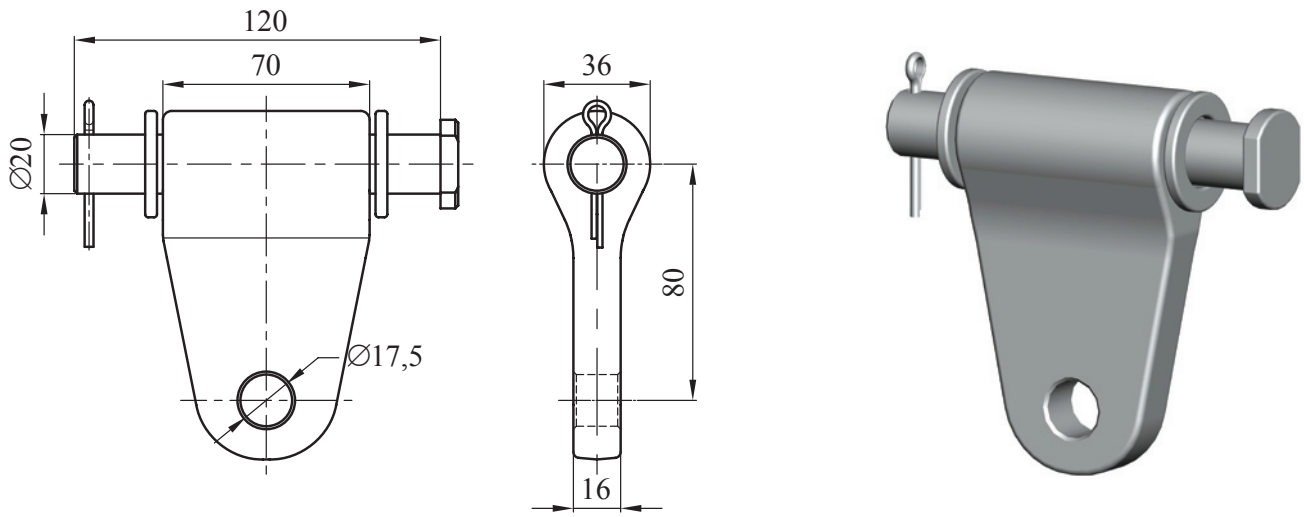

Minimalna prekidna sila	*Minimum breaking load*	120	kN
Masa	*Mass*	1,32	kg
Materijal: Čelik v. Zn	*Material: Steel h. d. g.*		

ŠKOPAC ***SHACKLE***	Tip *Type*	**SK-120**	Kat. br. *Cat. No.*	**MP395410**

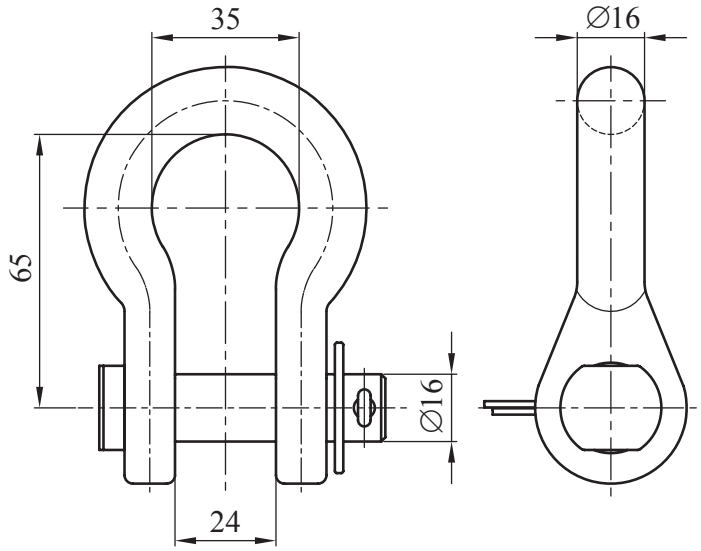

Minimalna prekidna sila	*Minimum breaking load*	120	kN
Masa	*Mass*	0,51	kg
Materijal: Čelik v. Zn	*Material: Steel h. d. g.*		

VILICA S BATIĆEM ***BALL CLEVIS***	**IEC 120/16**	Tip *Type*	**VB-1**	Kat. br. *Cat. No.*	**MP396658**

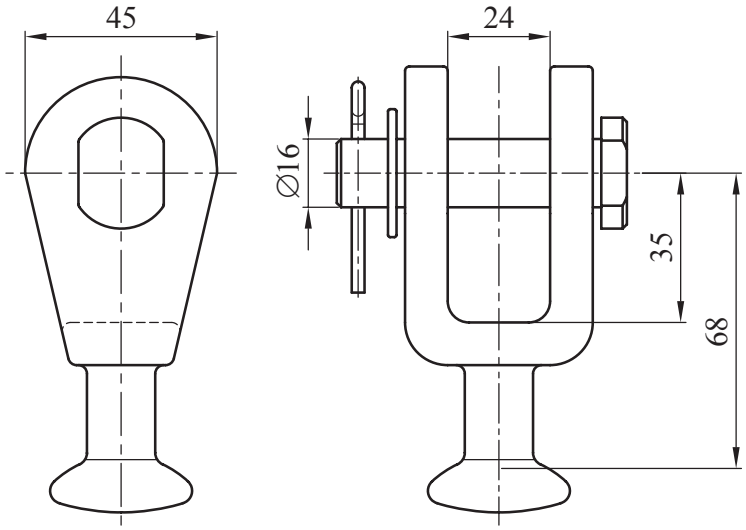

Minimalna prekidna sila	*Minimum breaking load*	120	kN
Masa	*Mass*	0,56	kg
Materijal: Čelik v. Zn	*Material: Steel h. d. g.*		

ZDJELICA S OČKOM *SOCKET TONGUE*	IEC 120/16A	Tip *Type*	ZO-16B/1	Kat. br. *Cat. No.*	MP396602

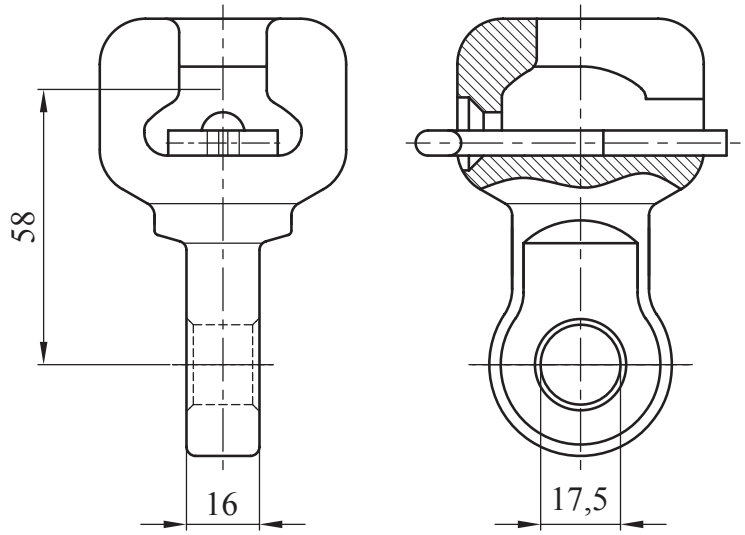

Minimalna prekidna sila	*Minimum breaking load*	80	kN
Masa	*Mass*	0,57	kg
Materijal: Čelik v. Zn	*Material: Steel h. d. g.*		

ZDJELICA S VILICOM *SOCKET CLEVIS*	IEC 120/16A	Tip *Type*	ZV-16B/1	Kat. br. *Cat. No.*	MP396620

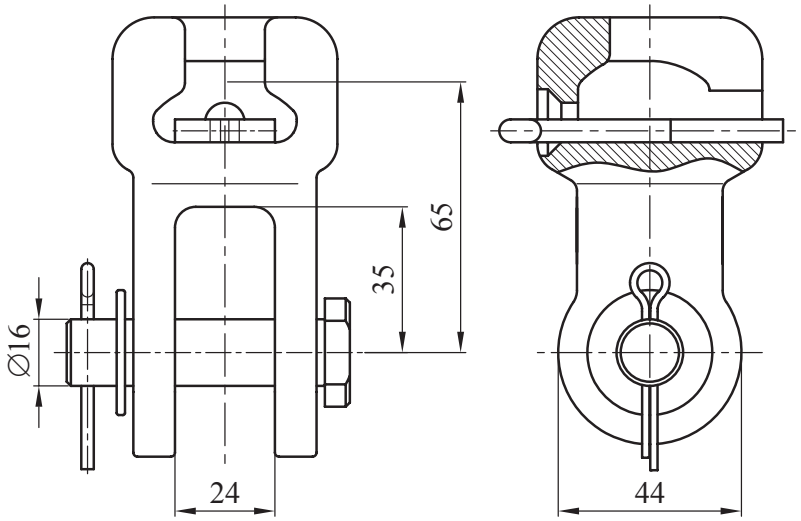

Minimalna prekidna sila	*Minimum breaking load*	120	kN
Masa	*Mass*	0,94	kg
Materijal: Čelik v. Zn	*Material: Steel h. d. g.*		

PRODUŽNIK VILICA - OČKA
EXTENSION LINK CLEVIS - TONGUE

Tip / *Type*: **P V/O-120**

Kat. br. / *Cat. No.*: **MP395310**

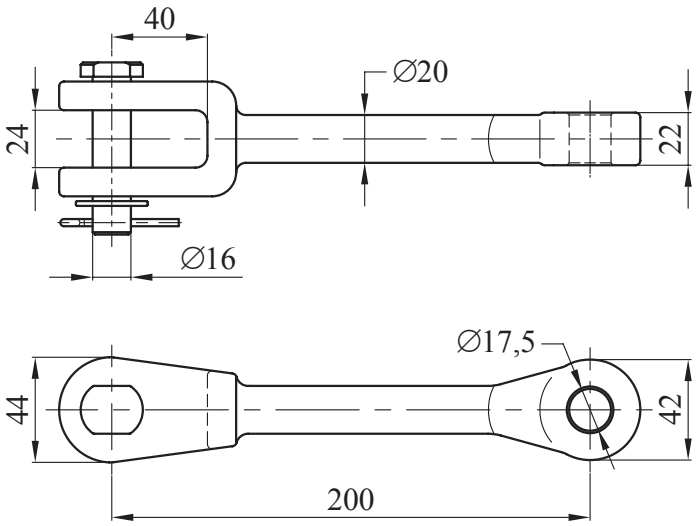

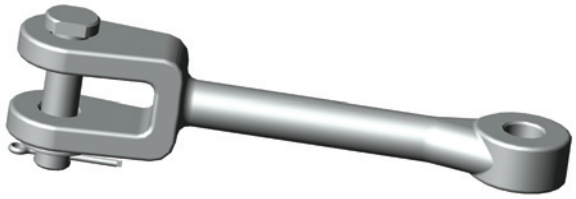

Minimalna prekidna sila	*Minimum breaking load*	120	kN
Masa	*Mass*	1,15	kg
Materijal: Čelik v. Zn	*Material: Steel h. d. g.*		

PRODUŽNIK VILICA - OČKA 90°
EXTENSION LINK CLEVIS - TONGUE 90°

Tip / *Type*: **P V/O-Z**

Kat. br. / *Cat. No.*: **MP395312**

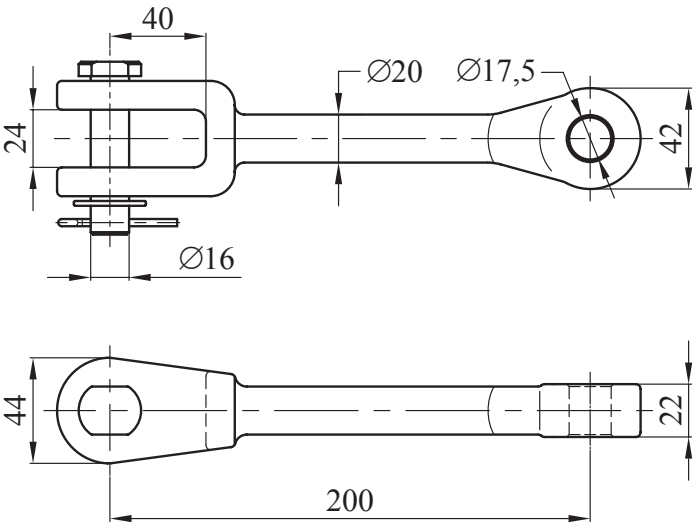

Minimalna prekidna sila	*Minimum breaking load*	120	kN
Masa	*Mass*	1,15	kg
Materijal: Čelik v. Zn	*Material: Steel h. d. g.*		

VIJAK S VILICOM ***BOLT WITH CLEVIS***	Tip *Type*	**V-VIL-M20**	Kat. br. *Cat. No.*	**MP395335**

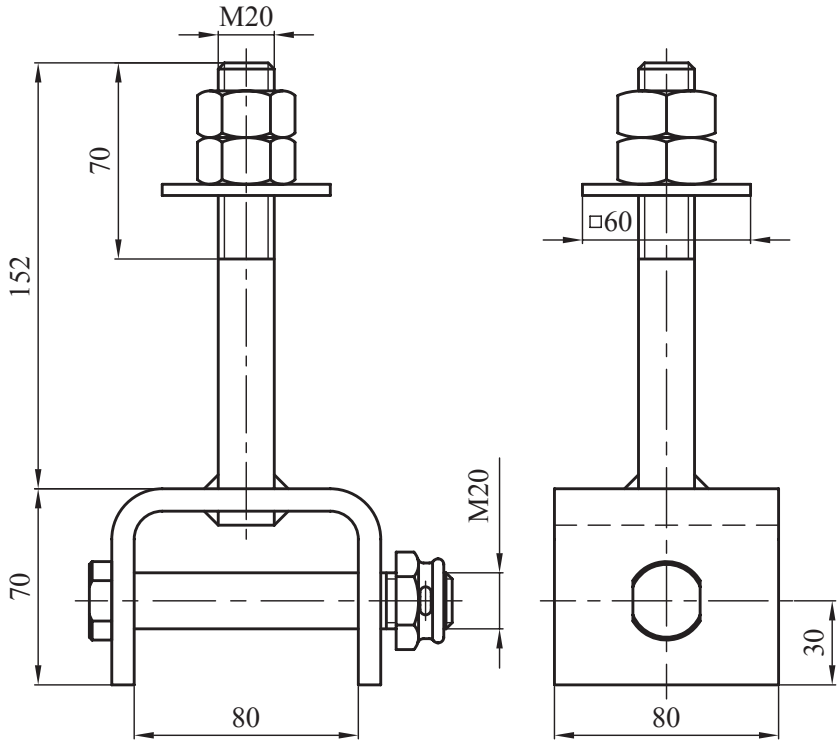

Minimalna prekidna sila	*Minimum breaking load*	120	kN
Masa	*Mass*	1,16	kg
Materijal: Čelik v. Zn	*Material: Steel h. d. g.*		

UNIVERZALNA ZATEZNA STEZALJKA
UNIVERSAL TENSION CLAMP

Tip / *Type*: **UZS-1**

Kat. br. / *Cat. No.*: **MP395222**

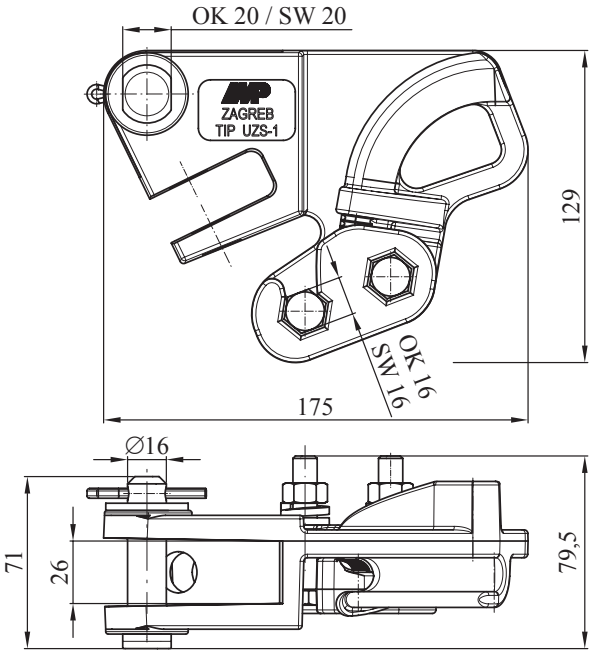

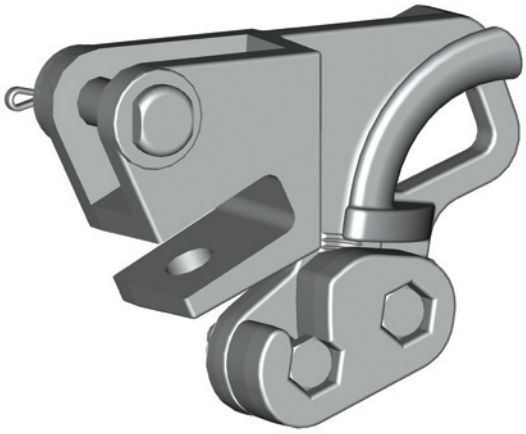

Minimalna prekidna sila	*Minimum breaking load*	35	kN
Masa	*Mass*	1,06	kg
Za uže: Al/Če 25/4 – 95/15 (Ø 6,0 – 14,0)	*ACSR 25/4 – 95/15 (Ø 6,0 – 14,0)*		
Materijal: Al legura	*Material: Al alloy*		

R-ZATIK
R-SOCKET SECURITY PIN

Tip / *Type*: **Z-R16**

Kat. br. / *Cat. No.*: **Y305206**

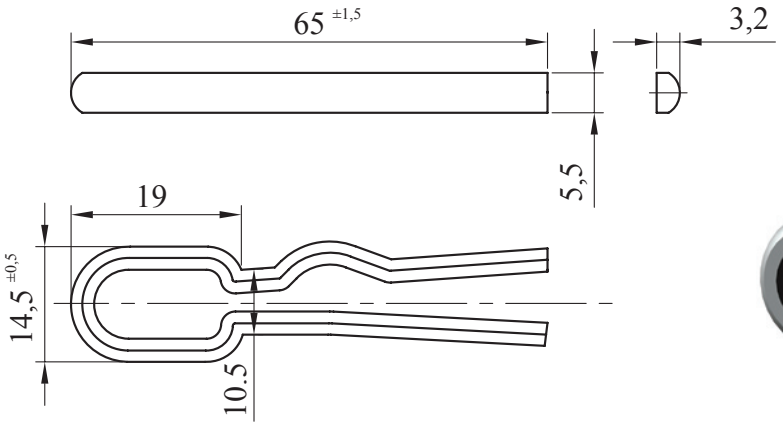

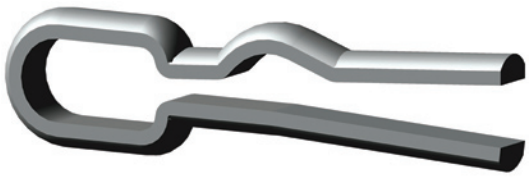

Minimalna prekidna sila	*Minimum breaking load*	-	kN
Masa	*Mass*	0,016	kg
Materijal: Nehrđajući čelik	*Material: Al alloy*		

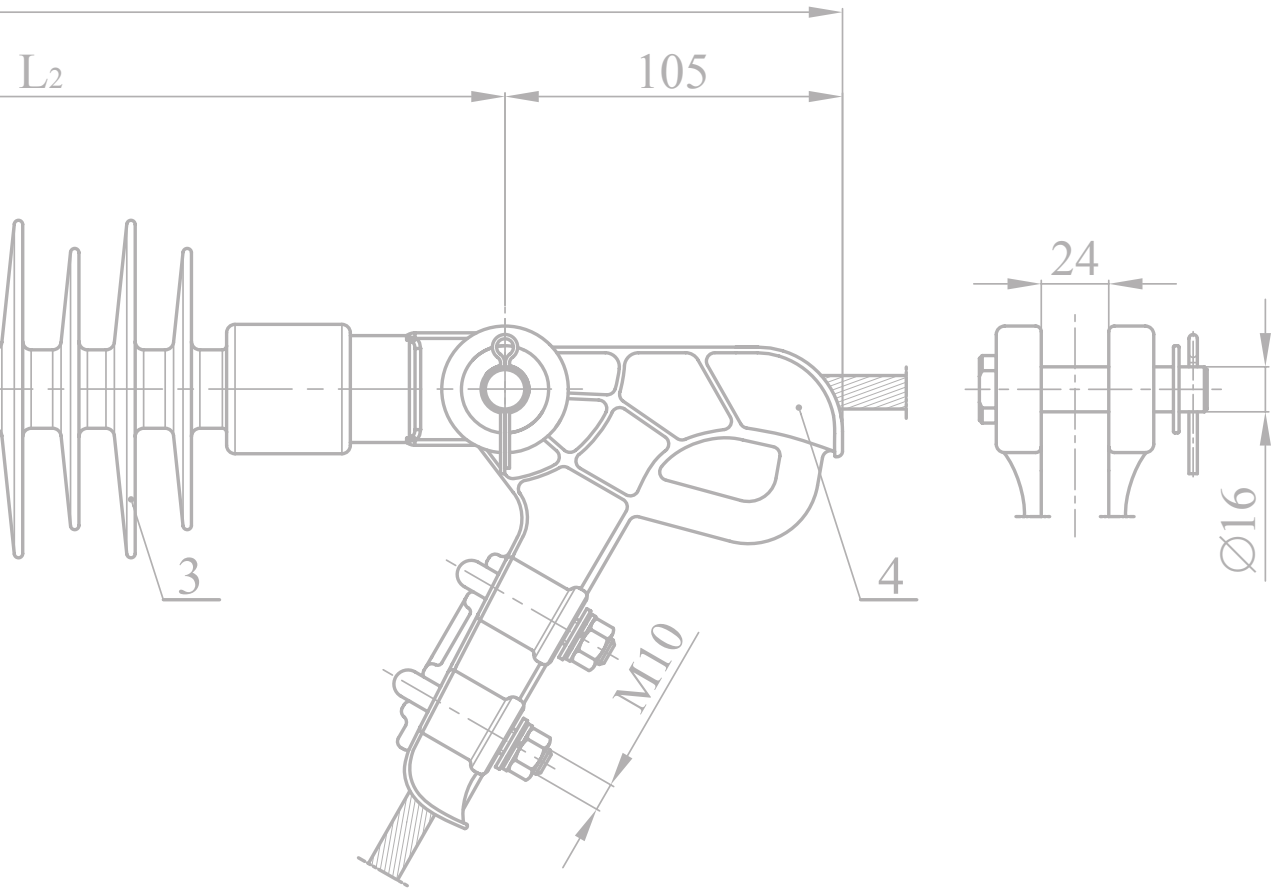

Molimo vas da eventualne primjedbe, sugestije ili nadopune dostavite u **METAL PRODUCT**.

Svu ambalažu i otpadni materijal odložite na predviđeno mjesto za tu namjenu.

*Should you wish to give any suggestions or comments, please send them to **METAL PRODUCT**.*

Please place the packaging material on appropriate depot.

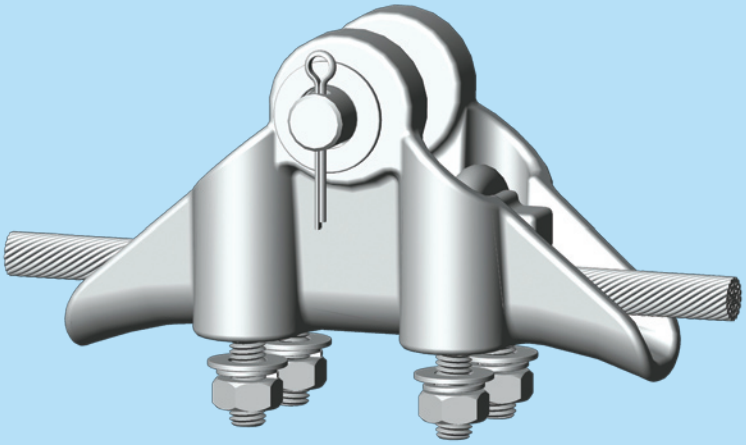

METAL PRODUCT®

Đačka 70, 10 020 Zagreb – Odra, Hrvatska

Tel. centrala:	+385 1 6379 555
Komercijala:	+385 1 6261 457
Teh. ured:	+385 1 6379 513
Telefax:	+385 1 6261 093
E-mail:	info@metal-product.hr
Web:	www.metal-product.hr

Katalog/Catalogue 6.1 - 02/2015